SMART POSITIONER
YT-3400 / 3450 SERIES

PRODUCT MANUAL

YT-3400

YT-3450

YTC
A rotork Brand

VERSION 1.17

Contents

1. Introduction 5
1.1 General Information for the users 5
1.2 Manufacturer Warranty 5
1.3 Explosion Proof Warning & Specific Conditions of Use 6
2. Product Description 7
2.1 General 7
2.2 Main Features and Functions 7
2.3 Label Description 8
2.4 Product Number 9
2.5 Product Specification 10
2.6 Certifications 11
2.7 Parts and Assembly 14
2.8 Product Dimension 15
2.8.1 YT-3400 15
2.8.2 YT-3450 16
3. Installation 17
3.1 Safety 17
3.2 Tools for installation 17
3.3 Linear positioner Installation 17
3.3.1 Linear positioner Installation 17
3.3.1.1 Safety 18
3.3.1.2 Standard lever type positioner Installation Steps 18
3.4 Rotary positioner Installation 22
3.4.1 Components 22
3.4.2 Rotary Bracket Information 23
3.4.3 Rotary positioner Installation Steps 24
4. Connection - Air 26
4.1 Safety 26
4.2 Supply Pressure Condition 26
4.3 Piping Condition 26
4.4 Connection – Piping with actuator 27
4.4.1 Single acting actuator 27
4.4.2 Double acting actuator 27
5. Connection – Power 28
5.1 Safety 28
5.2 Terminal overview 29
5.2.1 Input Signal Terminal 29
5.2.2 Feedback Signal Terminal 30

5.2.3 Limit Switch Terminal 30
5.2.4 Ground 31
6. Adjustments 32
6.1 Limit Switch Adjustment 32
6.2 A/M switch adjustment 33
6.3 Variable Orifice Adjustment 33
7. Auto Calibration and PCB Operation 34
7.1 Warning 34
7.2 Button Description 34
7.3 Run Mode (RUN) 34
7.4 Auto Calibration mode (AUTO CAL) 35
7.4.1 AUTO1 Calibration (AUTO1) 35
7.4.2 AUTO2 Calibration (AUTO2) 36
7.4.3 AUTO HF Calibration (AUTO HF) 36
7.5 Manual Mode (MANUAL) 37
7.6 Parameter Mode (PARAM) 37
7.6.1 Dead-Zone (dEAdZONE) 38
7.6.2 P Value (KP) 38
7.6.3 I Value (KI) 39
7.6.4 D Value (Kd) 39
7.6.5 P_ (KP_), I_(KI_), D_ (Kd_) Values 39
7.6.6 KF Up Value (KFUP) 40
7.6.7 KF Down Value (KFdN) 40
7.7 Hand Calibration Mode (HAND CAL) 41
7.7.1 Zero-Point (PV ZERO) and End-Point (PV END) for Valves 41
7.7.2 Zero-Point (TR ZERO) and End-Point (TR END) for Transmitter 42
7.7.3 Normal / Reverse Feedback Signal (TR NORM / REVS) 43
7.7.4 Normal / Reverse HART Signal (HT NORM / REVS) 43
7.8 Valve Mode (VALVE) 44
7.8.1 Acting Adjustment (ACT RA / dA) 44
7.8.2 Valve flow Characteristic Adjustment (CHAR) 45
7.8.3 User defining flow Characteristics (USER SET) 46
7.8.4 Tight Shut Open (TSHUT OP) 47
7.8.5 Tight Shut Close (TSHUT CL) 47
7.8.6 Split Range Mode (SPLIT) 48
7.8.7 Custom Zero Setting Mode (CST ZERO) 48
7.8.8 Custom End Setting Mode (CST ENd) 49
7.8.9 Interpolation Mode (ITP ON/OFF, ITP USER SET) 50
7.8.10 Acting Type (SINGLE / dOUBLE) 51
7.8.11 Lever Type (STd / AdT) 51

7.9 Diagnostic (dIAGNO) 52
7.9.1 PST Introduction 52
7.9.2 PST Mode 53
7.9.3 PST CFG 53
7.9.3.1 START PO 54
7.9.3.2 TARGET 1 54
7.9.3.3 TARGET 2 54
7.9.3.4 INTERVAL 55
7.9.3.5 TOL 55
7.9.3.6 LIMIT TM 55
7.9.3.7 LATENCY 56
7.9.4 PST RSLT 56
7.10 View Mode (VIEW) 57
8. Error and Warning Code 59
8.1 Error code 59
8.2 Warning code 60
9. Main Software Map 61

1. Introduction

1.1 General Information for the users

Thank you for purchasing Young Tech Co., Ltd products. Each product has been fully inspected after its production to offer you the highest quality and reliable performance. Please read the product manual carefully prior to installing and commission the product.

- The manual should be provided to the end-user.
- The manual can be altered or revised without any prior notice. Any changes in product's specification, design, and/or any components may not be printed immediately but until the following revision of the manual.
- When the manual refers to **"Valve Zero / Zero"** means the final valve position upon pneumatic pressure has been fully exhausted from positioner's OUT1 port. The valve zero position may differ between linear direct and reverse actions. (DA/RA)
- The manual should not be duplicated or reproduced for any purpose without prior approval from Young Tech Co., Ltd, Gimpo-si, South Korea.
- In case of any other problems that are not stated in this manual, please make immediate contact to Young Tech co., Ltd.
- Positioner is an accessory of the control valve, so please make sure to read the applicable instruction manual of the control valve prior to installation and operation.

1.2 Manufacturer Warranty

- For the safety, it is important to follow the instructions in the manual. Manufacturer will not be responsible for any damages caused by user's negligence.
- Any modifications or repairs to the product may only be performed if expressed in this manual. Injuries and physical damages caused by customer's modifying or repairing the product without a prior consultation with Young Tech co., Ltd will not be compensated. If any alterations or modifications are necessary, please contact Young Tech Co., Ltd directly.
- Manufacturer warrants the product from the date of original purchase of the product for eighteen (18) months, except as otherwise stated.
- Manufacturer warranty will not cover products that have been subjected to abuse, accidents, alterations, modifications, tampering, negligence, misuse, faulty installation, lack of reasonable care, repair or service in any way that is not contemplated in the documentation for the product, or if the model or serial number has been altered, tampered with, defaced or removed; damages that occurs in shipment, due to act of God, failure due to power surge, or cosmetic damage. Improper or incorrectly performed maintenance will void this limited warranty.
- For detailed warranty information, please contact the corresponding local Young Tech Co., Ltd office or main office in South Korea.

1.3 Explosion Proof Warning & Specific Conditions of Use

Please ensure the unit is being used and installed in explosion proof certified environment.

- The positioners are Explosion proof construction for internal pressure.
  For detail information, refer to “2.6 Certifications”
- Explosion proof type of cables and gaskets should be used, when explosion gases are present at the installation site.
- Keep cover tight while circuits are alive.
- Power should be turned off completely when opening product’s cover. When opening the cover, ensure that there is no power remaining in any electrical parts nearby.
- The positioners have 2 ports for power connection. Explosion proof type wires and packing should be used. Blind plug is required when any port is not being used.
- Ring terminal with surface area of more than 0.195mm^2 with M4 spring washer should be used to connect the power.
- For external ground terminal, ring terminal with surface area of more than 5.5mm^2 should be used.
- There is risk of explosion due to electro-static charge. Static electricity charge may develop when cleaning the product with a dry cloth. It is imperative to avoid static electricity charge in the hazardous environment. If cleaning the surface of the product is needed, must use wet clothes.
- Seal required within 50mm of enclosure.
- Consult the manufacturer for dimensional information on the flameproof joint for repair.
- To maintain IP66 rating, when installing threaded conduit, use type PTFE tape according to instructions.
- Tapped Exhaust option is used when it is required to vent away Group D, Div/Group IIA, Zone gases to a safe area.

2. Product Description

2.1 General

The smart positioner accurately controls valve stroke in response to an input signal of 4~20mA from the controller. Built-in micro-processor optimizes the positioner's performance and provides unique functions such as **Auto-Calibration, PID Control, and HART Protocol Communications.**

2.2 Main Features and Functions

- The LCD can be checked and the buttons can be operated without opening the cover which allows use of various functions of the positioner such as parameter adjustment in explosive gas atmosphere. User will easily understand the method of using 4 buttons because it work same in all mode of firmware interfaces.
- When unexpected situation like momentary blackout happens, our positioner boot-time only take 0.5 second and this can minimize the travel of valve which consequentially increase the safety of system.
- Positioner operates normally even there are sudden changes in supply pressure and / or high vibration environment.
- The method of Auto Calibration is very simple.
- As an advantage of having very low air consumption, It could greatly reduce operating costs in large-scale plants.
- It is compatible with most of controllers.
- Variable orifice can be used even to minimize the hunting occurrence and optimize operating conditions.
- Various information about positioner can be processed by HART communication(Option)
- Valve system becomes more stable by outputting analog feedback signal.
- Different valve characteristics can be adjusted – Linear, Quick Open, Equal Percentage, and Custom which user can make 18 points characterizations.
- Tight Shut – Close and Shut - Open can be set.
- PID parameters can be adjusted in the field without any additional communicator.
- A/M switch can be used to direct supply air to the actuator or to manually operate the positioner or valve without any signal.
- Split range 4~12mA or 12~20mA can be set.
- Operating temperature for positioners is -30 ~ 85℃ or -40 ~ 85℃ (Please check certified explosion proof ambient temperature)
- Hand calibration function can set Zero point or End point manually.
- It has IP66 protection grade.
- Epoxy polyester powder coating resists the corrosion process. (except YT-3450).
- Maintenance of the positioner is easy because of modularized inner structure.
- SIL2 certified.(For more information, see SIL Safety Instruction on homepage)

2.3 Label Description

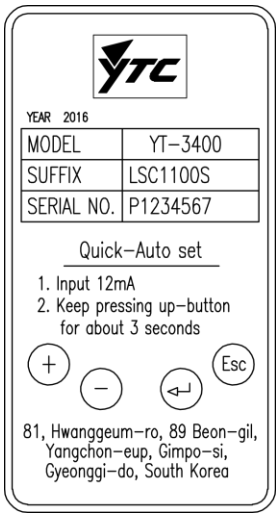

Fig. L-1: Sticker Label

- YEAR: Indicates manufactured year
- MODEL: Indicates the model number of the positioner.
- SUFFIX: Indicates any options.
- SERIAL NO.: Indicates unique serial number.

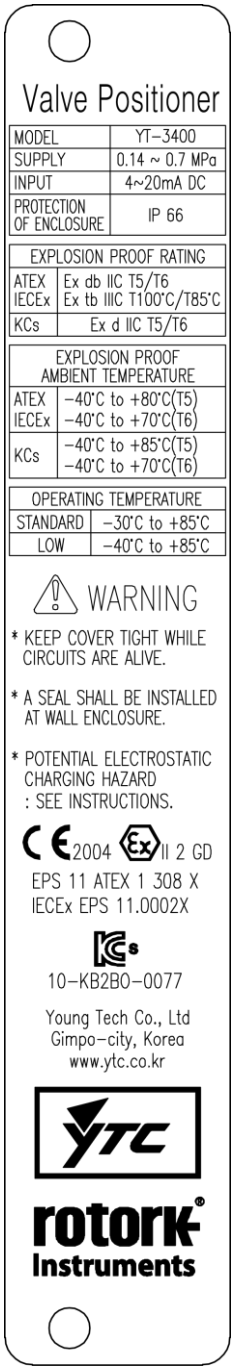

Fig. L-2: Stainless steel plate Label (for ATEX, IECEx, KCs etc.)

Fig. L-3: Stainless steel plate Label (for FM, CSA)

- MODEL: Indicates the model number of the positioner.
- SUPPLY: Indicates the supply pressure range.
- INPUT SIGNAL: Indicates input signal range.
- PROTECTION ENCLOSURE: Indicates protection grade.
- EXPLOSION PROOF: Indicates certified explosion proof grade
- AMBIENT TEMP.: Indicates the allowable ambient temperature.

2.4 Product Number

YT-3400 / 3450 series follows suffix symbols as follows.

YT-3400 / 3450 [1] [2] [3] [4] [5] [6] [7] [8]

1	Motion Type	L :	Linear
		R :	Rotary
2	Acting type	S :	Single
		D :	Double
3	Explosion Proof	C :	ATEX, IECEx, KCs(YT-3400 only)
		A :	FM, CSA
		E :	TRCU
4	Lever Type Linear	1 :	10 ~ 40 mm
		2 :	20 ~ 70 mm
		3 :	50 ~ 100 mm
		4 :	100 ~ 150 mm
	Rotary	1 :	M6 x 34L
		2 :	M6 x 63L
		3 :	M8 x 34L
		4 :	M8 x 63L
		5 :	Namur
5	Conduit - Air Connection Type	1 :	G 1/2 - PT 1/4
		2 :	G 1/2 - NPT 1/4 (YT-3450 is available for No. 2 ONLY)
		3 :	G 1/2 - G 1/4
		4 :	M20(Adapter type) - NPT 1/4
		5 :	NPT 1/2 - NPT 1/4
6	Communication	0 :	None
		2 :	+ HART Communication
7	Option	0 :	None
		1 :	+ Position Transmitter
		2 :	+ Limit Switch [1)]
		3 :	+ Position Transmitter and Limit Switch [2)]
8	Operating Temp.	S :	-30℃ ~ 85℃ (-22℉ ~ 185℉)
		L :	-40℃ ~ 85℃ (-40℉ ~ 185℉)

[1) & 2)] Limit switch: DC 24V (50mA) and transistor type

2.5 Product Specification

Model		YT-3400		YT-3450	
Housing Material		Aluminum		Stainless steel 316	
Motion Type		Linear	Rotary	Linear	Rotary
Acting Type		Single / Double			
Input Signal		4~20mA DC			
Minimum Current Signal		3.2mA(Standard), 3.8mA(Hart Included)			
Supply Pressure		0.14 ~ 0.7 MPa (1.4 ~ 7 bar)			
Stroke		10~150 mm	0 ~ 90°	10~150 mm	0 ~ 90°
Impedance		Max. 450Ω @ 20mA DC			
Air Connection		PT(G or NPT) 1/4		NPT 1/4	
Gauge Connection		PT(or NPT) 1/8		NPT 1/8	
Conduit Entry		G(PF) 1/2 or NPT 1/2 or M20*1.5P		G(PF) 1/2	
Ingress Protection		IP66			
Explosion Proof		Flameproof enclosure. Refer to “2.6 Certifications”			
Operating Temperature	Standard Type	-30℃ ~ 85℃ (-22℉ ~ 185℉)			
	Low Temp. Type	-40℃ ~ 85℃ (-40℉ ~ 185℉)			
LCD Operating Temperature		-30℃ ~ 85℃ (-22℉ ~ 185℉)			
Ambient Temperature Of Explosion proof		Refer to “2.6 Certifications”			
Linearity		±0.5% F.S.			
Hysteresis		±0.5% F.S.			
Sensitivity		±0.2% F.S			
Repeatability		±0.3% F.S.			
Flow Capacity		70 LPM (Sup.=0.14 MPa)			
Air Consumption		Below 2 LPM (Sup.=0.14 MPa @ idle)			
Output Characteristic		Linear, Quick Open, EQ%, User Set (18 points)			
Vibration		No Resonance up to 100Hz @ 6G			
Humidity		5-95% RH @ 40℃			
Communication (Option)		HART Communication (Rev. 7)			
Feedback Signal (Option)		4~20mA (DC 9~28V)			
Weight		3.4kg (7.5 lb)		7.0 kg (15.4 lb)	
Painting		Epoxy Polyester Powder Coating		-	

Tested under ambient temperature of 20’C, absolute pressure of 760mmHg, and humidity of 65%.
Please contact Young Tech Co., Ltd for detailed testing specification.

2.6 Certifications

※ All certifications below are posted on YTC homepage(www.ytc.co.kr).

- **KCs (Korea, YT-3400 Only)**

  Type : Explosion proof construction for internal pressure
  Rating : Ex d IIC T5/T6 IP66
  Certification No. : 10-KB2BO-0077
  Ambient temperature : -40 ~ +70℃(T6), -40 ~ +85℃(T5)

- **ATEX**

  Type : Explosion proof construction for internal pressure
  Rating : II 2G Ex db IIC T5/T6, II 2D Ex tb IIIC T85℃/T100℃
  Certification No. : EPS 11 ATEX 1 308 X
  Ambient temperature : -40/-20 ~ +70℃ T6(T85℃), -40/-20 ~ +80℃ T5(T100℃)

- **IECEx**

  Type : Explosion proof construction for internal pressure
  Rating : Ex db IIC T5/T6, Ex tb IIIC T85℃/T100℃
  Certification No. : IECEx EPS 11.0002X
  Ambient temperature : -40/-20 ~ +70℃ T6(T85℃), -40/-20 ~ +80℃ T5(T100℃)

- **CSA**

  Type : Explosion proof construction for internal pressure
  Rating : Ex db IIC T5 or T6
  Class I, Zone 1, AEx db IIC T5 or T6
  Class II, Division 1, Groups E, F and G; Ex tb IIIC T85℃/T100℃
  AEx tb IIIC T85℃/T100℃
  Certification No. : 2541710
  Ambient temperature : -20℃ to +70℃(T6), -20℃ to +80℃(T5)

- **FM**

  Type : Explosion proof construction for internal pressure
  Rating : Ex db IIC T5/T6, Ex tb IIIC T85℃/T100℃
  XP/I/1/BCD/T6 Ta = -40℃ to +80℃
  DIP/II, III/1/EFG/T6/Ta = -40℃ to +80℃; IP66
  I/1/AEx db IIC T5 Ta = -40/-20℃ to +80℃
  I/1/AEx db IIC T6 Ta = -40/-20℃ to +70℃
  21/AEx tb IIIC T85℃/T100℃
  T6 Ta = -40/-20℃ to +70℃
  T5 Ta = -40/-20℃ to +80℃; IP66
  Original Project ID : 3053561
  Ambient temperature : (T6) -40℃ to +70℃, (T5) -40℃ to +80℃

- **TRCU**

  Type : Explosion proof construction for internal pressure
  Rating : 1Ex d IIC T6/T5 Gb X, Ex tb IIIC T85°C/T100°C Db X, IP66
  Certification No. : RU C-KR.MIO62.B.04778
  Ambient temperature : -40 ~ +70℃ (T6/T85℃), -40 ~ +80℃ (T5/T100℃)

- **SIL2 (in a redundant structure up to SIL 3)**

  Intended application : Safety function is defined as to move into fail-safe-position, when signal to positioner is interrupted.
  Certification No. : V 460.02/15

- **Electromagnetic Compatibility (EMC)**

  - EMC directive 2014/30/EC from April 2016
  - EC Directive for CE conformity marking

- **TRCU (Russia, Kazakhstan, Belarus)**

  Type : Explosion proof construction for internal pressure
  Rating : 1Ex d IIC T6/T5 Gb X, Ex tb IIIC T85℃/T100℃Db X IP66
  Certification No. : RU C-KR.MЮ62.B.04778
  Ambient temperature : -40 ~ +70℃ T6(T85℃), -40 ~ +80℃ T5(T100℃)

2.7 Parts and Assembly

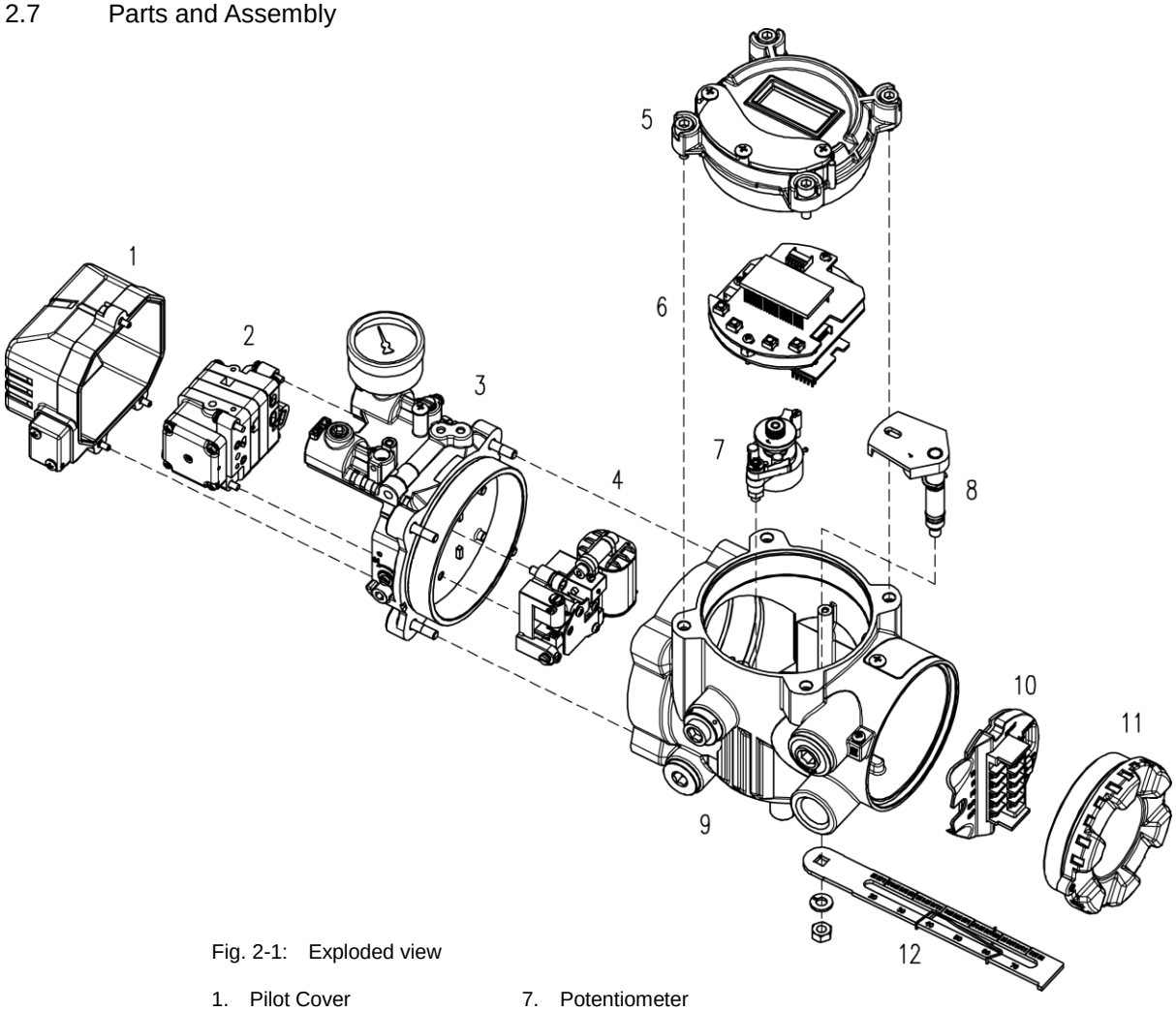

Fig. 2-1: Exploded view

1. Pilot Cover
2. Pilot Unit
3. Manifold
4. Torque Motor
5. Main Cover
6. Main PCB
7. Potentiometer
8. Main Shaft
9. Main Body
10. Terminal PCB
11. Terminal Cover
12. Feedback Lever

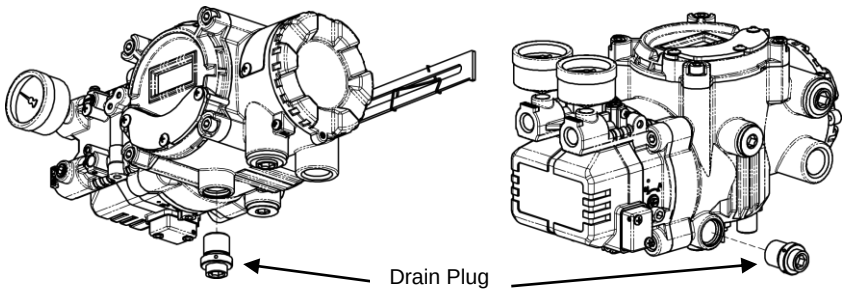

Fig. 2-2: Location of drain plug according to orientation of positioner's mounting

YT-3400 / 3450 series have two drain ports to be used for internal condensation. Please use larger drain plug for the condensation and block other remaining port with blind plug.

2.8 Product Dimension

2.8.1 YT-3400

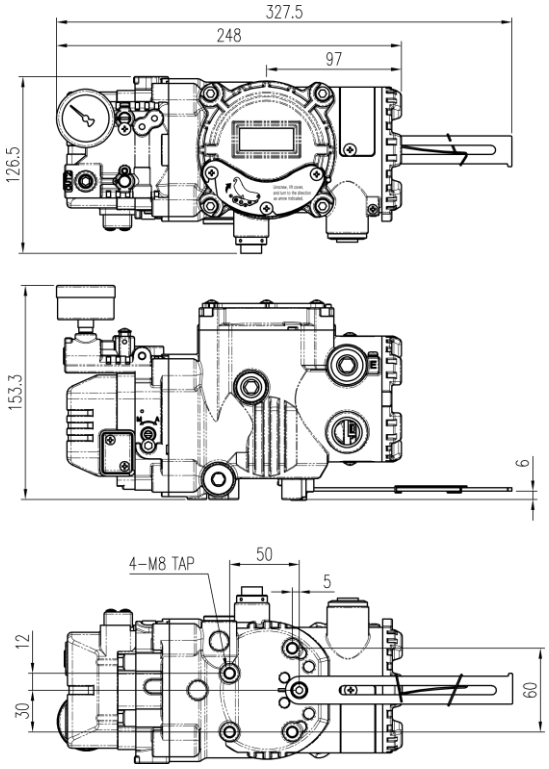

Fig. 2-3: YT-3400L

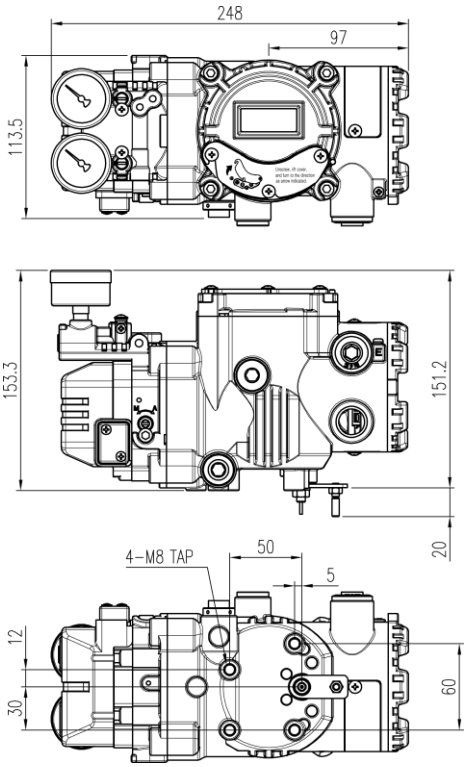

Fig. 2-4: YT-3400R (Fork lever type)

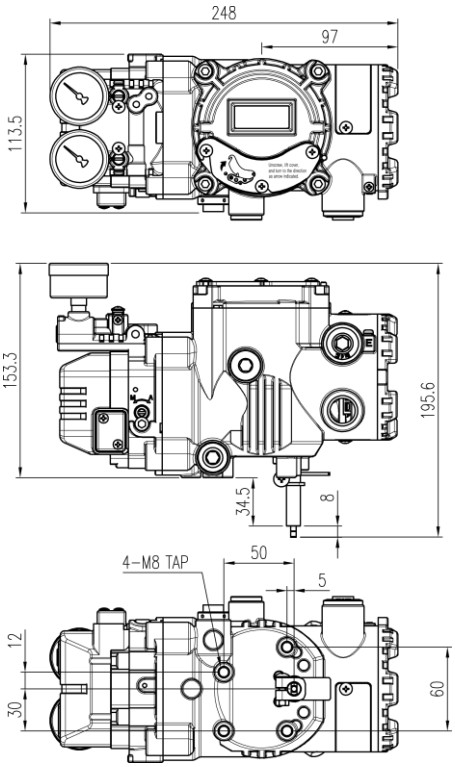

Fig. 2-5: YT-3400R (Namur type)

2.8.2 YT-3450

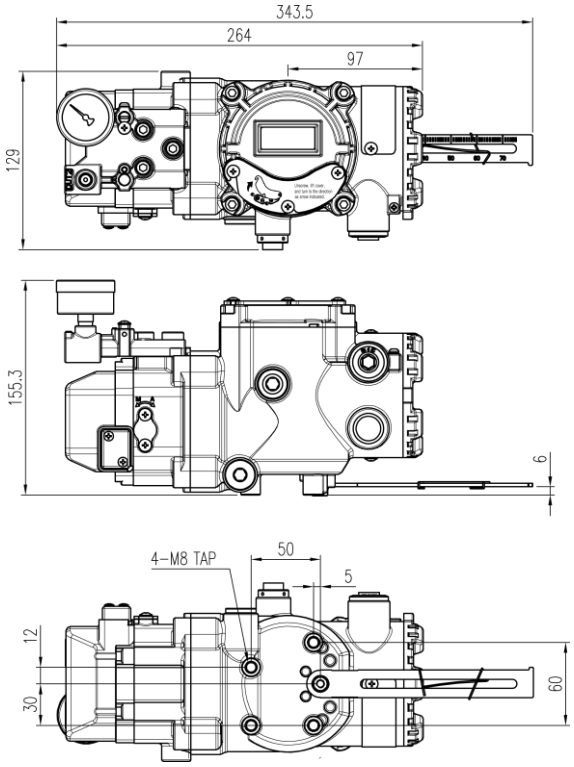

Fig. 2-6: YT-3450L

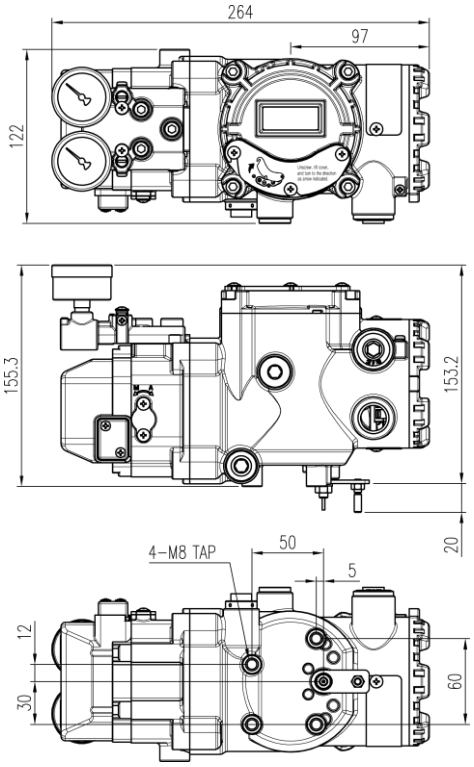

Fig. 2-7: YT-3450R (Fork lever type)

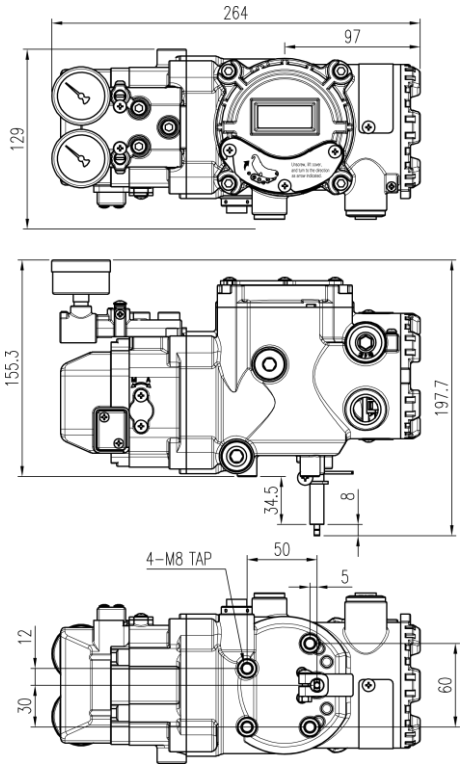

Fig. 2-8: YT-3450R (Namur type)

3. Installation

3.1 Safety

When installing a positioner, please ensure to read and follow safety instructions.

- Any input or supply pressures to valve, actuator, and / or to other related devices must be turned off.
- Use bypass valve or other supportive equipment to avoid entire system “shut down”.
- Ensure there is no remaining pressure in the actuator.

※ Installed in accordance with the National Electrical Code(NEC), ANSI/NFPA 70, or CEC Part 1 as applicable.(FM approved product)

3.2 Tools for installation

- Hex key set for hex socket cap bolts
- (+) & (-) Screw drivers
- Spanners for hexagonal-head bolts

3.3 Linear positioner Installation

Linear positioner should be installed on linear motion valves such as globe or gate type which uses spring return type diaphragm or piston actuators.

3.3.1 Linear positioner Installation

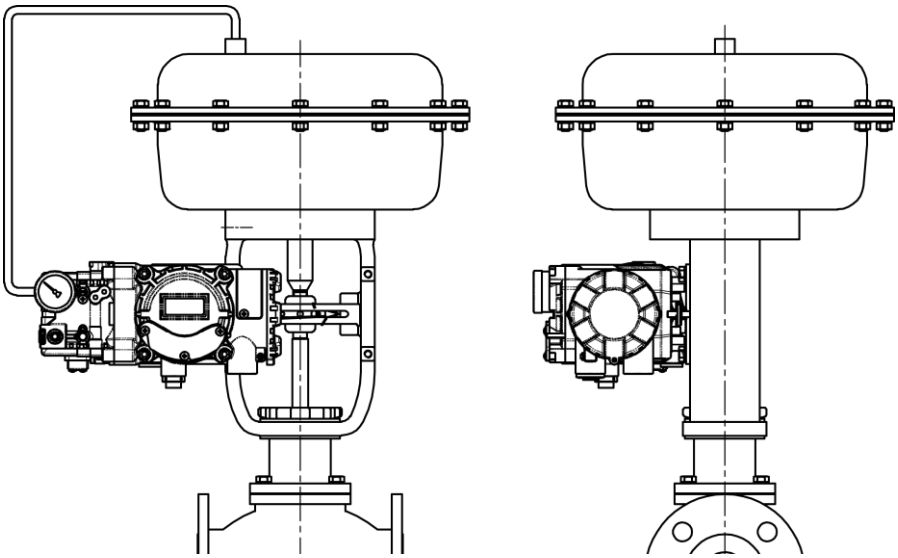

Fig. 3-1: Installation example

Before proceeding with the installation, ensure following components are available.

- Positioner
- Feedback lever and lever spring
- M6 nut and spring washer (fastening feedback lever to a main shaft)
- Bracket, bolts and washers for positioner – not supplied with the positioner
- Connection bar – not supplied with the positioner

3.3.1.1 Safety

Proper bracket must be made in order to adapt the positioner on the actuator yoke.

Please consider following important points when a bracket is being designed.

- Positioner's feedback lever must be vertical to the valve stem at 50% of the valve stroke.
- The connection bar of the actuator clamp for the feedback lever should be installed in such a way that the valve stroke length coincides with the corresponding figure in "mm" marked on the feedback lever. Improper setting may cause poor linearity

3.3.1.2 Standard lever type positioner Installation Steps

1. Assemble the positioner with the bracket made in previous step by fastening the bolts. The bolt size is M8 x 1.25P.

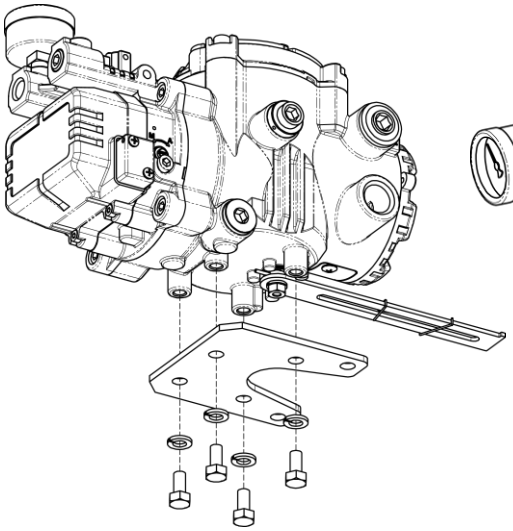

Fig. 3-2: Attaching to positioner to bracket

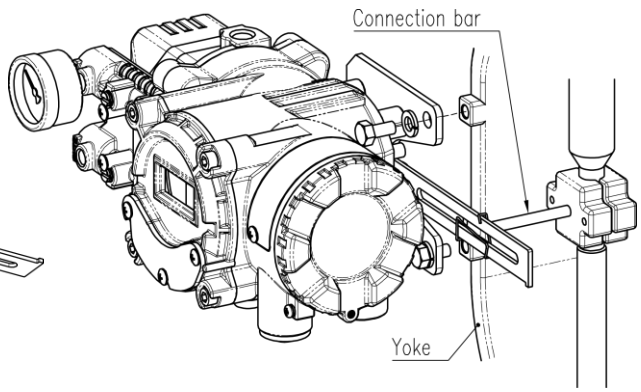

Fig. 3-3: Attaching the bracket to actuator yoke

2. Attach the positioner with the bracket to the actuator yoke
   – **DO NOT TIGHTEN THE BRACKET COMPLETELY.**

3. Connect connection bar to the actuator clamp. The hole gap on the feedback lever is 6.5mm so the connection bar's outer diameter should be less than or equal to 6mm.

4. Connect an air-filter regulator to the actuator temporarily. Supply enough air pressure to the actuator in order to position the valve stroke at 50% of the total stroke.

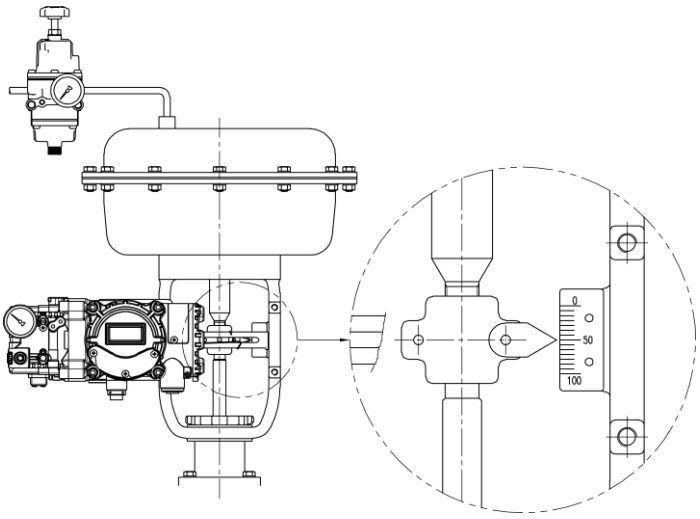

Fig. 3-4: YT-3400 / 3450L

5. Insert the connection bar between the feedback lever and lever spring. The connection bar must be located upward from the spring lever as shown the below left figure. If it is located downward from the spring lever as shown the below right figure, the connection bar or the spring lever will be worn out quickly because of excessive strong tension.

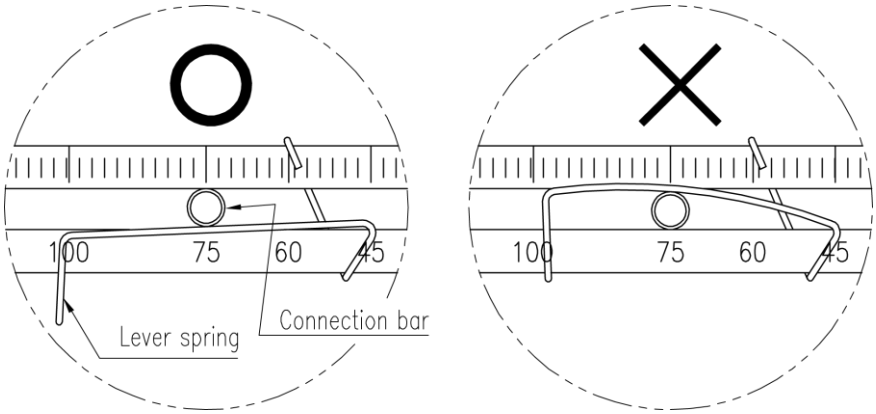

Fig. 3-5: Proper way to insert connection bar between feedback lever and lever spring

6. Check if feedback lever is vertical to the valve stem at 50% of the valve stroke. If it is not vertical, adjust the bracket or the connection bar to make vertical. Improper installation may cause poor linearity.

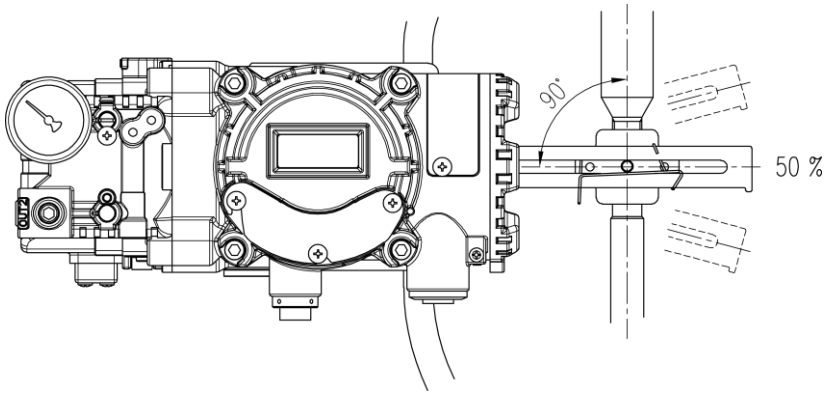

Fig. 3-6: Feedback lever and valve stem

7. Check the valve stroke. The stroke numbers are engraved on the feedback lever of the positioner. Position the connection bar at the number on the feedback lever which corresponds with the desired valve stroke. To adjust, move the bracket, the connection bar or both.

   ※ The effective linear lever angle is 30 degree.

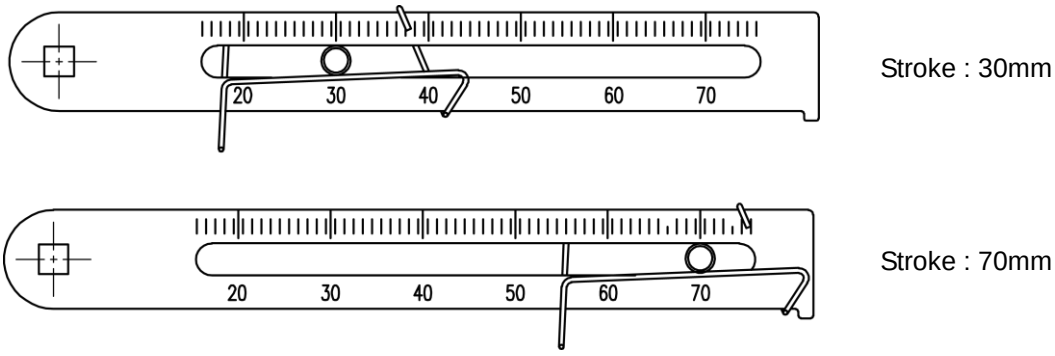

Fig. 3-7: Feedback lever and location of the connection bar

8. After installing the positioner, operate the valve from 0% to 100% stroke by using direct air to the actuator. On both 0% and 100%, the feedback lever should not touch the lever stopper, which is located on the backside of the positioner. If the feedback lever touches the stopper, the positioner should be installed further away from the yoke.

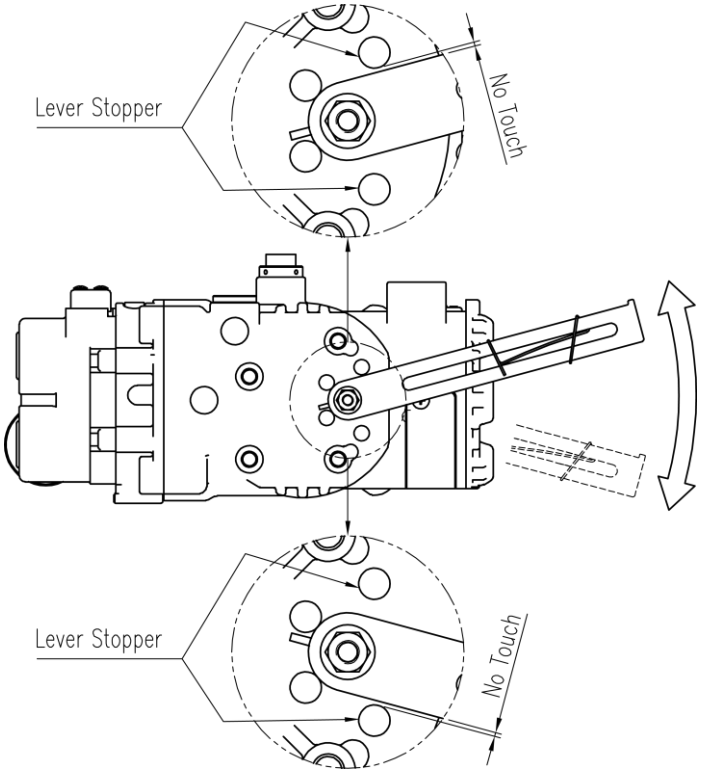

Fig. 3-8: Feedback lever should not touch lever stopper on 0% ~ 100% valve stroke.

9. After the installation, tighten all of the bolts on the bracket and the connection bar.

3.4 Rotary positioner Installation

Rotary positioner should be installed on rotary motion valve such as ball or butterfly type which uses rack and pinion, scotch yoke or other type of actuators which its stem rotates 90 degrees. Before proceeding with the installation, ensure following components are available.

3.4.1 Components

- Positioner
- Fork lever (Only Fork lever type)
- Rotary bracket set (2 piece)
- 4 pcs x hexagonal headed bolts (M8 x 1.25P)
- 4 pcs x M8 plate washers
- 4 pcs x wrench headed bolts (M6 x 1P x 15L)
- 4 pcs x M6 nuts
- 4 pcs x M6 spring washers
- Bolts and washers to attach bracket to actuator – not supplied with the positioner

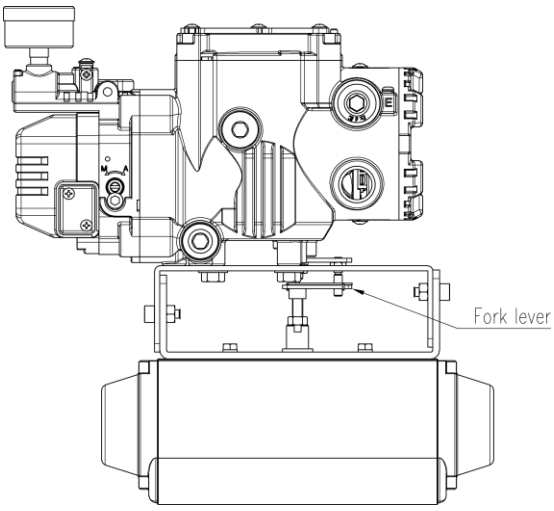

Fig. 3-9: Fork lever type

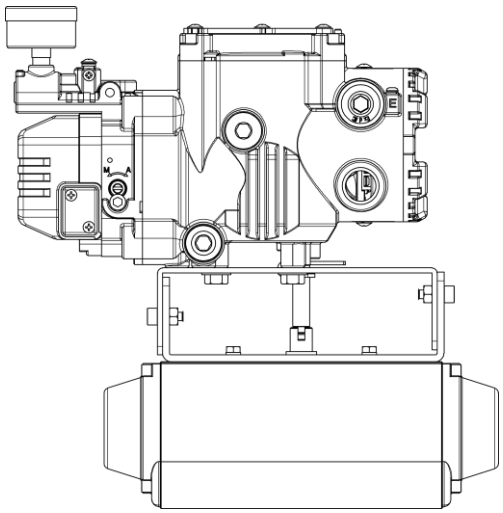

Fig. 3-10: Namur type

3.4.2 Rotary Bracket Information

The rotary bracket set (included with the positioner) contains two components. The bracket is designed to fit onto the actuator with 20mm, 30mm and 50mm stem height (H) according to VDI/VDE 3845 standard. Please refer to below table how to adjust the height of the bracket.

Actuator stem height (H)	Markings of bolt holes			
	A-L	B-L	A-R	B-R
20mm	H : 20	H : 20, 30	H : 20	H : 20, 30
30mm	H : 30	H : 20, 30	H : 30	H : 20, 30
50mm	H : 50	H : 50	H : 50	H : 50

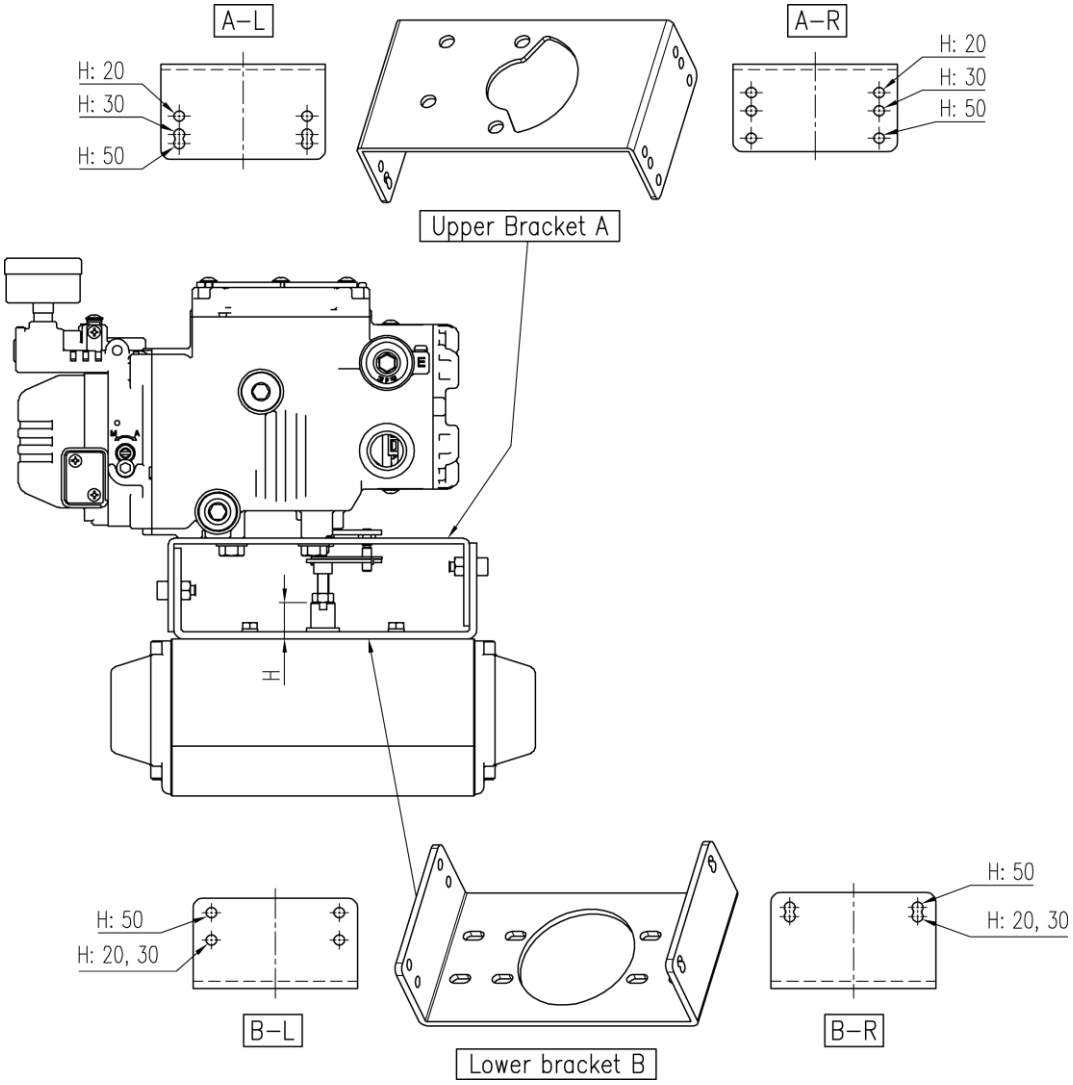

Fig. 3-11: Rotary Brackets and positioner

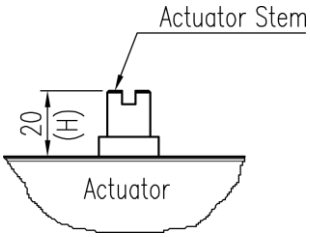

Fig. 3-12: Actuator stem Height

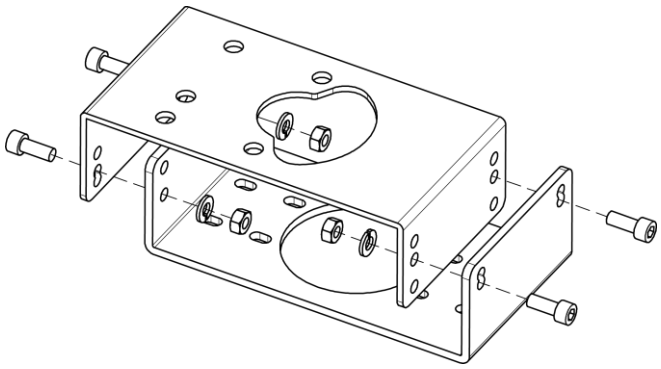

Fig. 3-13: Exploded Brackets

3.4.3 Rotary positioner Installation Steps

1. Please check the actuator's stem height and adjust the brackets by referring to the above bracket table.

2. Attached the brackets onto the actuator. It is recommended to use spring washer so the bolts will not be loosen from vibration.

3. Set rotation position of the actuator stem at 0%. For single acting actuator, it is easy to check 0% point by supplying no pressure to the actuator. For double acting actuator, check actuator stem's rotation direction – clockwise or counter-clockwise - by supplying pressure to the actuator.

4. (Only Fork lever type) Install the fork lever after setting actuator's stem at 0%. Check the actuator stem's rotation direction – clockwise or counter-clockwise.

   Installation angle of the fork lever should be 45 to the longitudinal direction of the actuator.

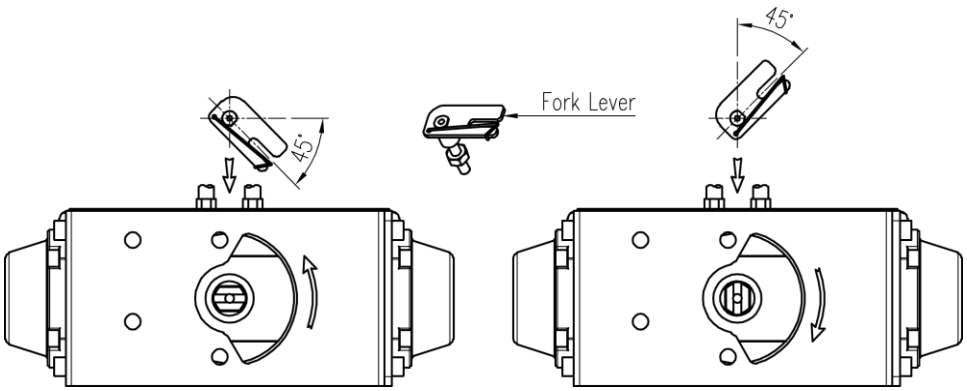

Fig. 3-14: Counter-clockwise and clockwise rotation.

5. (Only Fork lever type) After setting fork lever position, fasten lock nuts which are located on the bottom of the fork lever. Ensure to set the gap between the bottom of upper bracket and the top of the fork lever within **6~11mm.**

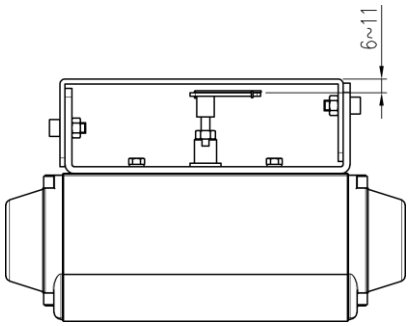

Fig. 3-15: Height to the bracket (fork lever type)

6. Attach the positioner to the bracket. *<Only fork lever type: Fix the clamping pin (5mm Dia.) into the fork lever slot and insert center pin (2mm Dia.) of the main shaft of the positioner into the hole of center of the fork lever. The clamping pin will be locked to the fork lever spring.>* Setting alignment of center of main shaft of the positioner and center of the actuator's stem is very important. Poor alignment of the main shaft and the actuator's stem decreases the positioner's durability due to unnecessary forces on the main shaft.

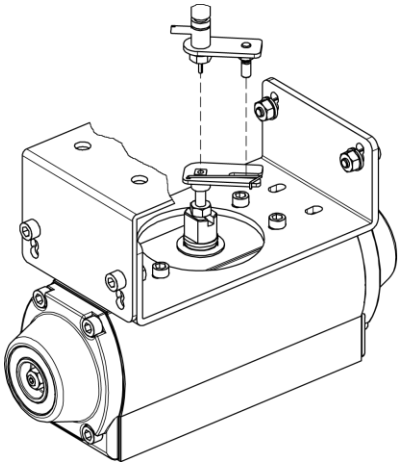

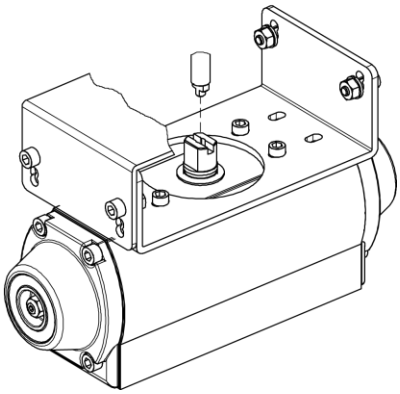

Fig. 3-16: Main shaft center alignment (Fork lever) Fig. 3-17: Main shaft center alignment (Namur)

7. Tighten the positioner and the bracket with bolts **after checking the positioner's position.**

4. Connection - Air

4.1 Safety

- Supply pressure should be clean and dry air – avoiding moisture, oil or dust.
- Always recommended to use air filter regulator (i.e. YT-200 series).
- Young Tech Co., Ltd **has not tested positioner's operation with any other gases other than clean air. Please contact Young Tech Co., Ltd for any questions.**
- Tapped Exhaust (Option) must be sealed to avoid leaks at the 1/4" NPT connection for connecting of Group D, Div/Grp IIA, Zones gases. Gases must be compatible with the wetted materials of the smart positioner. Tapped Exhaust option is used when it is required to vent away Group D, Div/Group IIA, Zone gases to a safe area.

4.2 Supply Pressure Condition

- Dry air with at least 10℃ lower than ambient temperature.
- Avoid from dusty air. Use 5 micron or smaller filter.
- Avoid oil.
- Comply with ISO 8573-1 or ISA 7.0.01.
- Supply pressure range is 0.14 ~0.7 MPa (1.4 ~ 7 bar)
- Set air filter regulator's pressure level 10% higher than actuator's spring range pressure.

4.3 Piping Condition

- Ensure inside of pipe is clean of obstructions.
- Do not use pipeline that is squeezed or shows any type of damamges.
- Pipeline should have more than 6mm of inner diameter (10mm outer diameter) to maintain flow rate.
- The length of pipeline system should not be extremely long. Longer pipeline system may affect flow rate due to the friction inside of the pipeline.

4.4 Connection – Piping with actuator

4.4.1 Single acting actuator

Singe acting type positioner is set to use only OUT1 port. OUT1 port of positioner should be connected with supply port of actuator when using spring return actuator of single acting type.

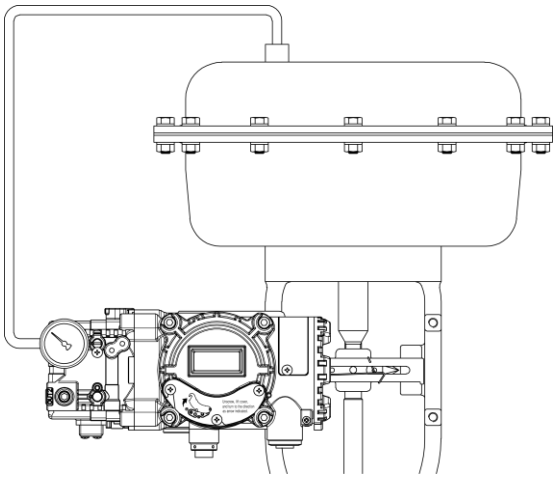

Fig. 4-1: Single acting linear actuator

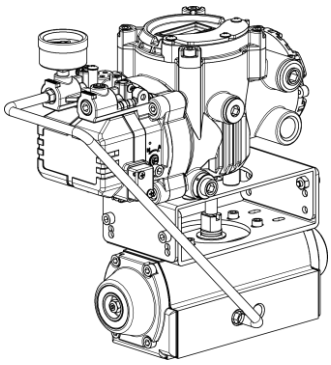

Fig. 4-2: Single acting rotary actuator

4.4.2 Double acting actuator

Double acting type positioner is set to use OUT1 and OUT2 port. As input signal increases, the supply pressure will be supplied through OUT1 port.

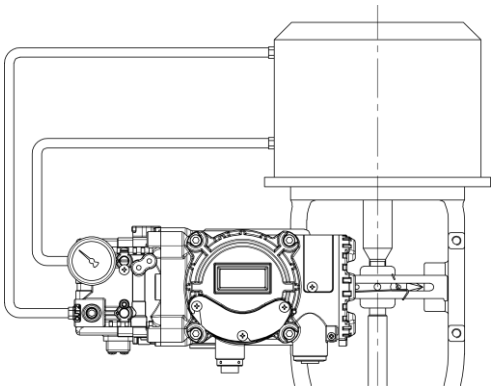

Fig. 4-3: Double acting linear actuator

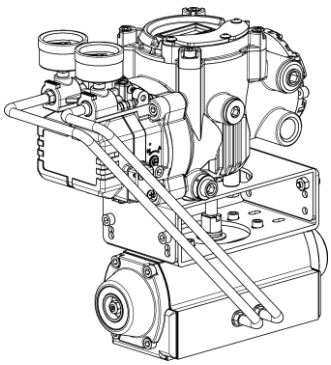

Fig. 4-4: Double acting rotary actuator

5. Connection – Power

5.1 Safety

- Conduit entry connection tap is G(PF) 1/2.
- When installing in hazardous and explosive gas area, conduit tube or pressure-proof packing union must be used. The compound charging box should be the flameproof type and must be sealed completely.
- Before connecting terminal, ensure that the power is off completely. **Do not open the cover when the power is still alive.**
- Please use ring terminal to protect against vibration or any other external impact.
- Positioner usually uses 4~20mA DC. Minimum ampere of input signal of standard type positioner is 3.2 mA and Hart internal type positioner's minimum ampere of input signal is 3.8 mA but maximum ampere of input signal should be 24mA or under.
- Positioner with PTM options must be supplied with **9~28V DC** separately. For L/S option (transistor type), separate **24V DC (50mA)** must be supplied.
- Positioner should be grounded.
- Please use twisted cable with conductor section are 1.25mm^2 and that is suitable for 600V (complying with the conductor table of NEC Article 310.) The outer diameter of the cable should be between 6.35 ~ 10mm. Use shield wire to protect against electro-magnetic field and noise.
- Please do not install the cable near high noise equipment, such as high-capacity transformer or motor.

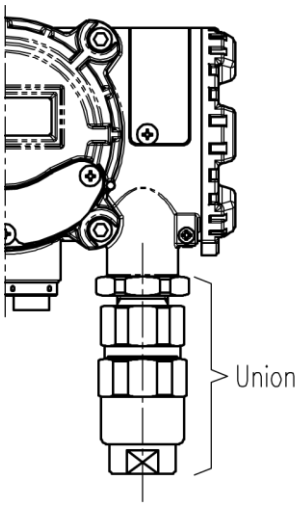

Fig. 5-1: Pressure-proof packing union

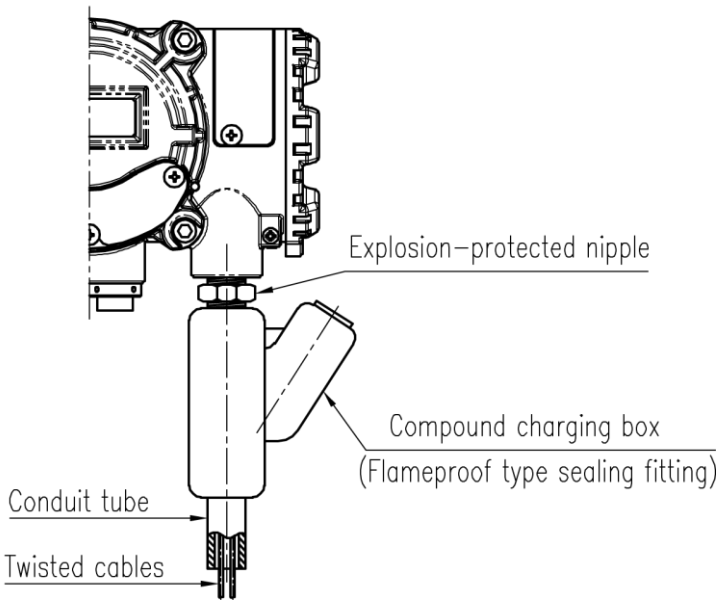

Fig. 5-2: Flame proof type compound charge box

5.2 Terminal overview

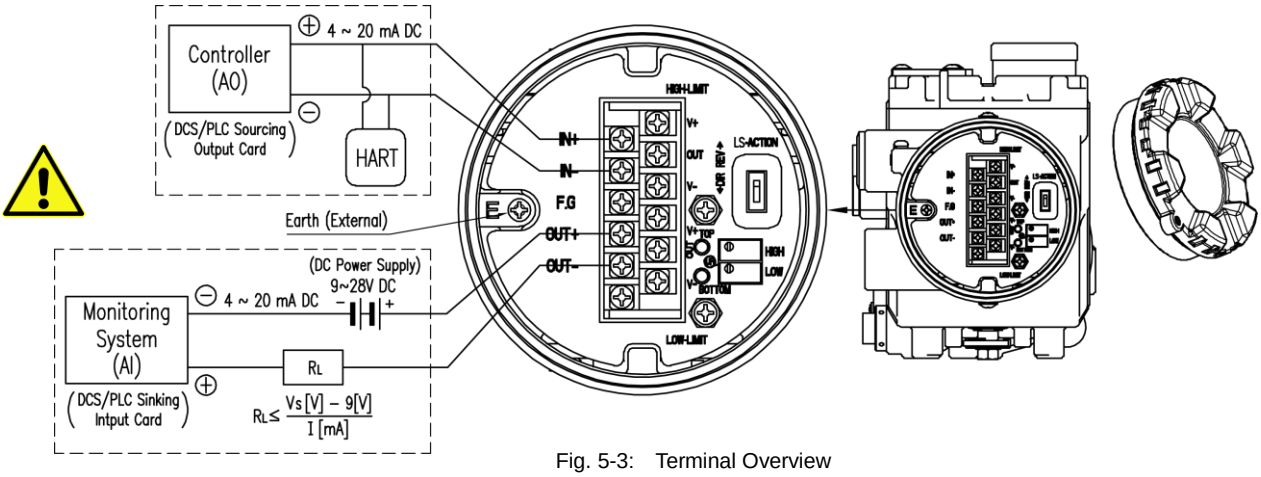

Fig. 5-3: Terminal Overview

IN +:	Input Signal (+)	Upper right 3 terminals:	Limit switch 100% Point
IN -:	Input Signal (-)	Lower right 3 terminals:	Limit switch 0% Point
F.G :	Frame Ground	AO:	Analog Output
OUT+:	Feedback Signal (+)	AI:	Analog Input
OUT-:	Feedback Signal (-)	Vs:	Voltage Source
		RL:	Load Resistance

5.2.1 Input Signal Terminal

1. Open terminal cover by removing stopper bolt using 3mm wrench.
2. There are two conduit entries on the right hand of the positioner body. Please use appropriate union or conduit by considering the operating condition. Insert cables into the entry with using proper flameproof type packing union or conduit.
3. Input signal terminals are on the top left side of the terminal block of the terminal plate. Insert signal cables with ring terminal into the conduit entry (G 1/2 or PF 1/2) and secure them with (+) and (-) terminals on the block. Make sure to tighten bolts to the ring terminals of the cables with 1.5 N・m (15 kgf・cm) torque. Please check the polarity of the terminals.
4. Close the terminal cover and fasten stopper bolt using 3mm wrench.

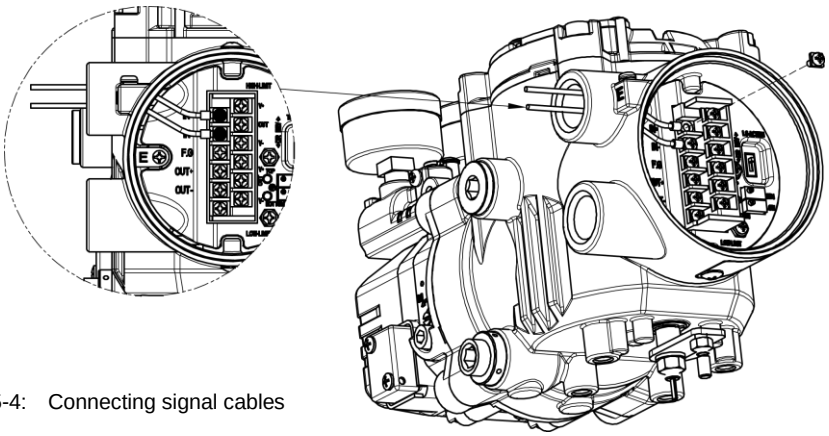

Fig. 5-4: Connecting signal cables

5.2.2 Feedback Signal Terminal

Locate terminal of feedback signal and connect (+) and (-) according to the polarity. Make sure to tighten bolts with 1.5 N・m (15 kgf・cm).

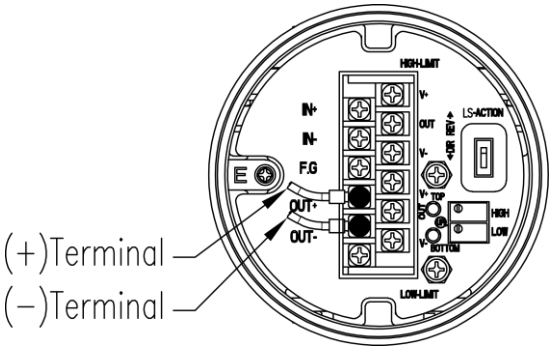

Fig. 5-5: Connecting feedback signal cables

5.2.3 Limit Switch Terminal

Locate terminal of limit switch and connect (+) and (-) according to the polarity. Make sure to tighten bolts with 1.5 Nm (15 kgf・cm).

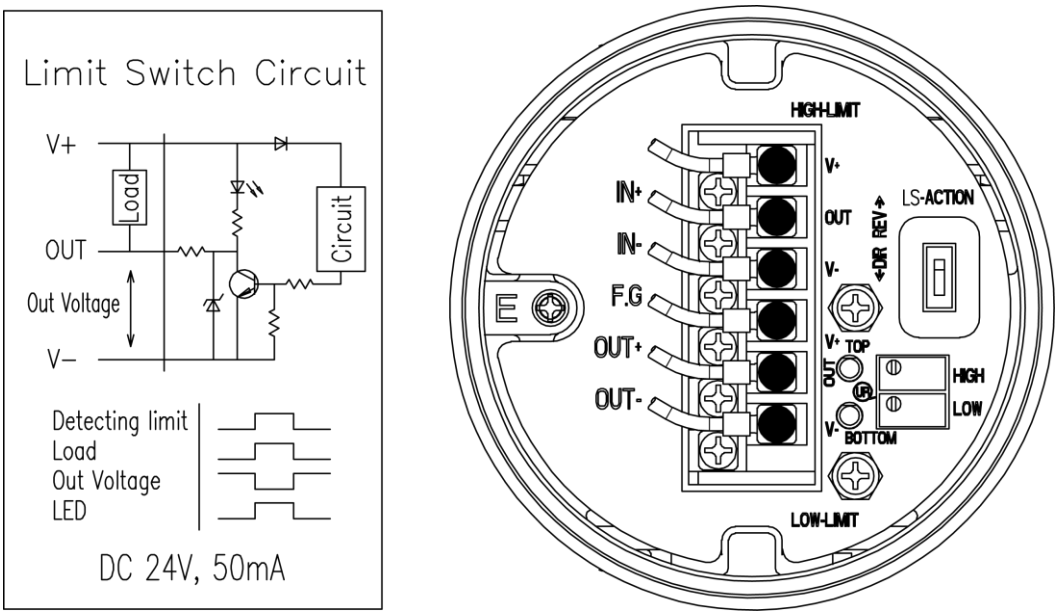

Fig. 5-6: Connecting Limit switch cables

5.2.4 Ground

1. Ground must be done before operating the positioner.
2. Open terminal cover and there is an internal ground bolt on the left of terminal plate. When using internal ground, use 3mm wrench to loosen locking bolts of the terminal box cover. An external ground bolt is located next to the conduit entry. Please make sure that the resistance is less than 100ohm.
3. When using external ground, use (+) screw driver to unscrew the ground bolts. Insert external ground bolts and spring washer into ring type terminal of the ground cables and tighten them with bolts.

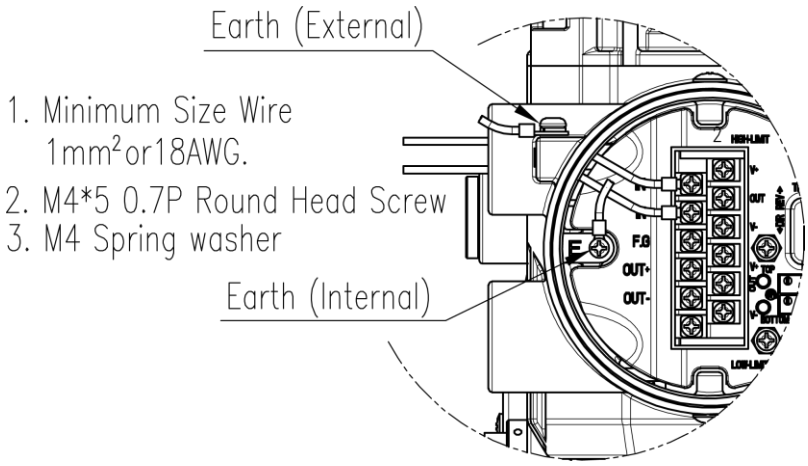

Fig. 5-7: Connecting Earth

6. Adjustments

6.1 Limit Switch Adjustment

1. HIGH variable resistor adjusts the sensing point of valve end-point. In case of Direct Action type, it will sense 4mA point, and for Reverse Action type, 20mA of input signal will be its sensing point. Upon sensing, red LED will be lighted.
2. LOW variable resistor adjusts the sensing point of valve zero-point. In case of Direct Action type, it will send 20mA point, and for Reverse Action type, 4mA of input signal will be its sensing point. Upon sensing, red LED will be lighted.
3. If V+ and OUT terminals are connected, electric current can be used on limit switch. It can light up control room's lamp or make alarm sound.
4. If V- and OUT terminals are connected, electric voltage can be used on limit switch. It can receive signal from a computer.
5. LS-ACTION dip switch enable to switch the action between direct or reverse action.
6. By adjusting variable resistor, sensing level can be set. If it is turned clockwise, sensing level will go up; if turned in counter-clockwise, sensing level will go down.

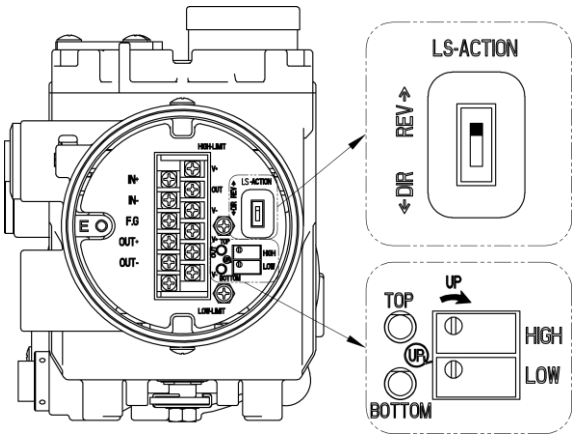

Fig. 6-1: Limit switch adjustment

6.2 A/M switch adjustment

1. On the left hand bottom of positioner, there is A/M switch (Auto/Manual). If the switch is turned clockwise (toward “A”) and it is fasten tightly, then the supply pressure will be transferred to actuator through outport by positioner control. On the other hand, if the switch is turned counter-clockwise (toward “M”), it is loosened, then the supply pressure will be directly supplied to the actuator regardless of positioner control. It is extremely important to check the pressure level when the switch is loosened
2. Check whether the supply pressure is too high.
3. After using “Manual” function, A/M switch should be returned to “Auto”

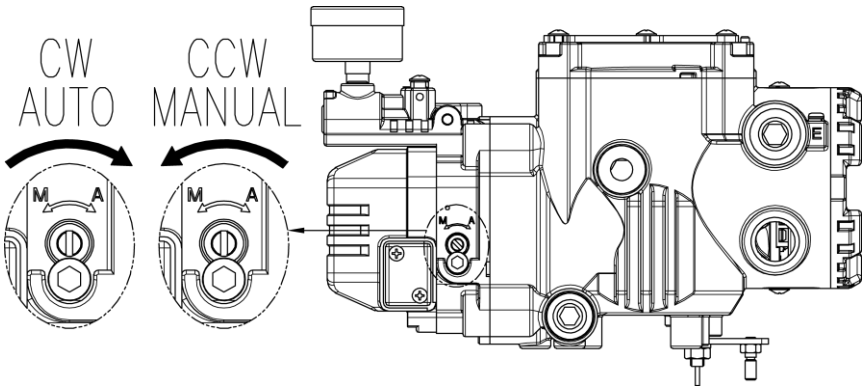

Fig. 6-2: A/M switch adjustment

6.3 Variable Orifice Adjustment

Hunting can be occurred when the actuator’s volume is too small. In order to prevent hunting, orifice can be adjusted. By adjusting the orifice, the flow rate of the supply pressure to actuator can be adjusted. Please use (-) driver to adjust the orifice. When slot (-) of the orifice is horizontal, the flow rate becomes maximum. When slot (-) of the orifice is vertical, the flow rate becomes minimum.

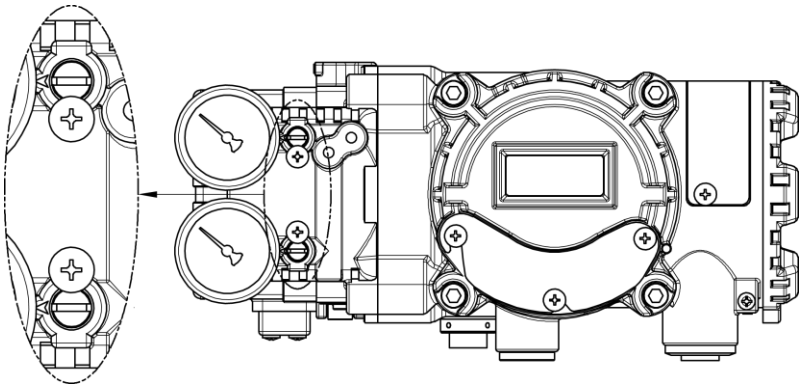

Fig. 6-3: Variable orifice adjustment

7. Auto Calibration and PCB Operation

7.1 Warning

Following process will operate valve and actuator. Before proceeding with any Auto Calibration, please separate valve from the entire system by using bypass valve, so Auto Calibration will not affect entire valve process.

7.2 Button Description

Positioner has 4 buttons, and they enable to perform various functions.

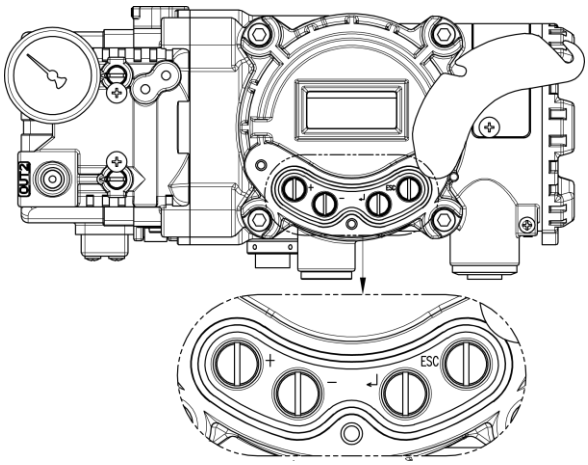

Fig. 7-1: <UP> & <DOWN >: Move to next menu, and adjust.
<ENTER>: Enter to main and sub menus, and save
<ESC>: Return to previous menu

7.3 Run Mode (RUN)

After power connection to the positioner, Run Mode will be appeared on positioner's LCD screen in about 0.5 seconds. "RUN" indicates that the positioner adjusts the valve stroke according to the receiving signal. There are six types of display message in "RUN" Mode.

1. Run PV: Process Value - valve stroke %
2. Run SV (%): Set Value – input signal 0~100%
3. Run SV (mA): Set Value – input signal 4~20mA
4. Run MV: Manipulate Valve – Motor Manipulate Value (Digit)
5. Run VEL: Velocity – Current valve stem's velocity (Digit)
6. Run ERR: Error – Difference between SV and PV (%)

To change display, Press and hold <ESC>, press <DOWN> several times until a desired display appears. The display will change in the order indicated above. If <ESC> + <UP> pushed, the order will be appeared in opposite order. By pressing <ESC>, the display will return to "RUN PV" mode.

※ Please note that the screen will return to “RUN PV” mode if 100 seconds elapse from the last button pressed.

※ By pressing <ESC> button several times from any MODES, it will return to “RUN PV” mode. Therefore, if the users have entered into wrong modes by mistake or do not wish to proceed with their current work, they could return to “RUN PV” mode.

7.4 Auto Calibration mode (AUTO CAL)

Auto Calibration mode (AUTO CAL) automatically calibrates the positioner. “AUTO CAL” process takes about 2~3 minutes, and the duration of the process varies upon the size of the actuator. There are 3 types of AUTO CAL.

	Zero Point	End Point	P, I, D	RA / DA	BIAS	V_0
AUTO 1	O	O	X	X	X	X
AUTO 2	O	O	O	O	O	O
AUTO HF	O	O	O	O	O	O

It is recommend to perform AUTO2 calibration for initial positioner setting.

7.4.1 AUTO1 Calibration (AUTO1)

AUTO1 changes only zero and end points; however other parameters(P, I, D etc.) will not be adjusted. It is recommended to perform AUTO1 when the positioner has been set by the valve manufacturer already, and the field user wants to re-calibrate the positioner.

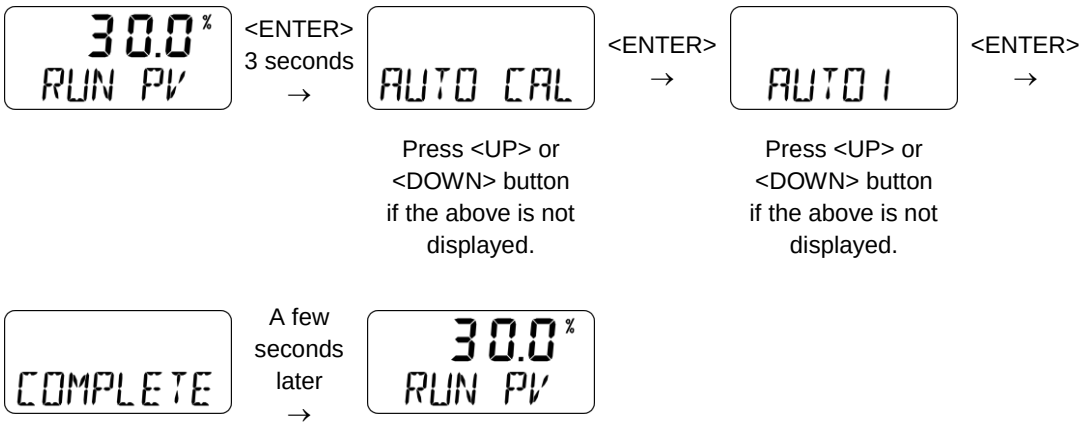

7.4.2 AUTO2 Calibration (AUTO2)

AUTO2 changes all of the parameters. It is recommended to perform AUTO2 when the positioner has been installed on the valve for the first time or the positioner has been reinstalled after dissemble from an actuator.

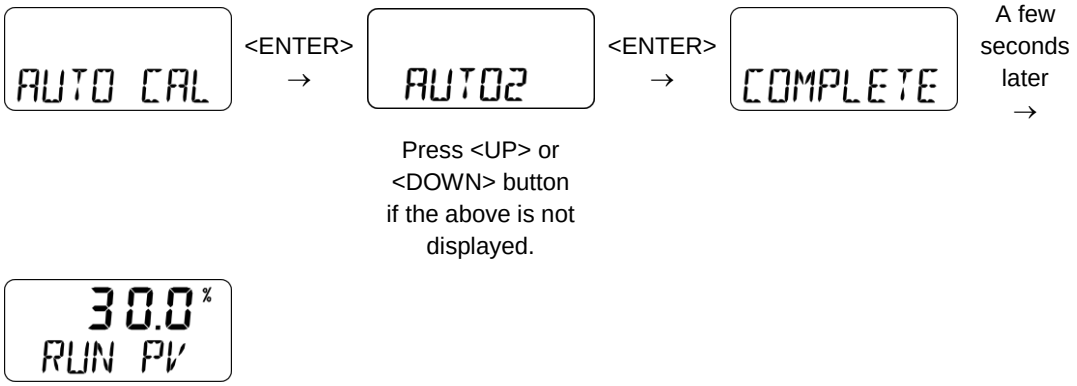

7.4.3 AUTO HF Calibration (AUTO HF)

AUTO HF calibration is same calibration process as to AUTO2, but AUTO HF is used when the valve has high friction level.

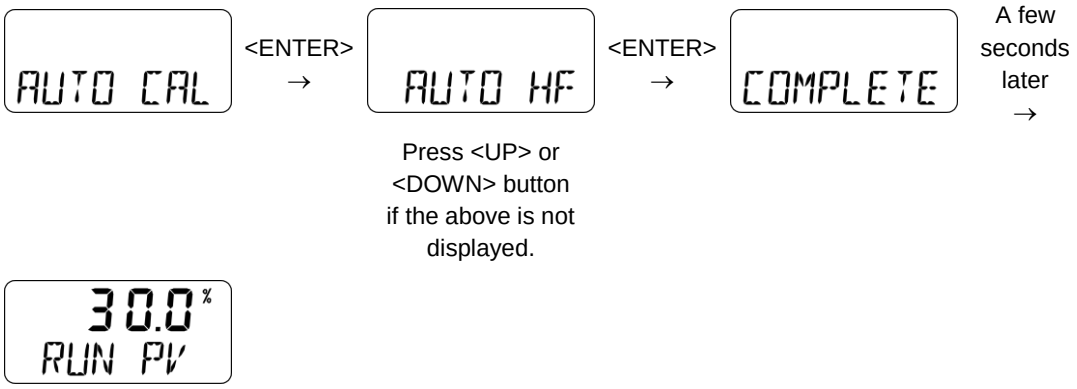

7.5 Manual Mode (MANUAL)

Manual mode is used to maneuver valve stem manually. In Manual mode, the positioner does not control the valve by the signal received from outside, but it could be controlled to move up and down by pressing <UP> and <DOWN> button.

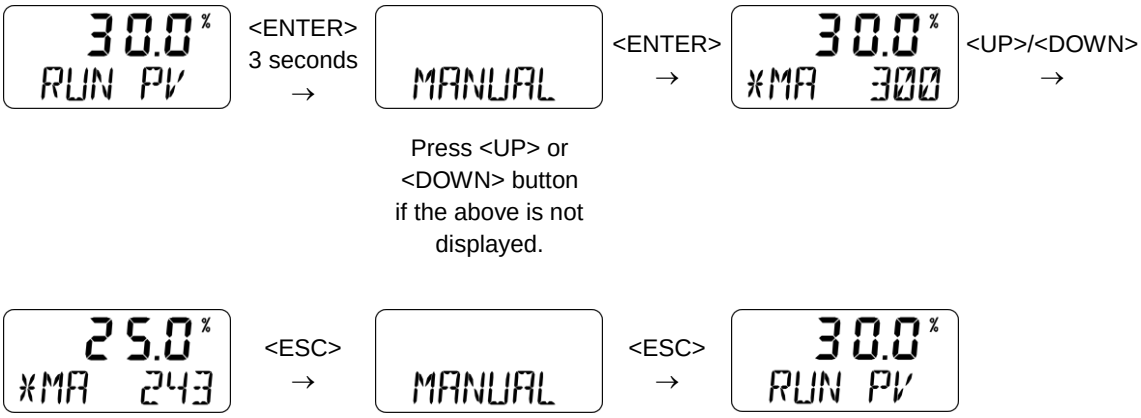

7.6 Parameter Mode (PARAM)

AUTO CAL optimizes most of the valve actuator control values. However, in some instances, hunting or oscillation may occur when the valve actuator control values are not optimized. Hunting or oscillation can be prevented by adjusting parameter values.

Once parameter values have been changed, the changed values are being affected as soon as you save the value. To save the changes, please ensure to press "ENTER" button. There is no need to go back to "RUN" mode after changes are being made to observe the changes.

Below are the list of features which could be set from Parameter mode.

1) Dead-Zone (dEAdZONE)
2) P value (KP)
3) I value (KI)
4) D value (Kd)
5) P_, I_, D_ value (KP_, KI_, Kd_)
6) KF Up value (KFUP)
7) KF Down value (KFdN)

7.6.1 Dead-Zone (dEAdZONE)

Dead-Zone indicates the percentage of error allowance. In case of high level of packing friction, which may cause hunting, increasing the value of Dead-Zone can stable the valve operation.

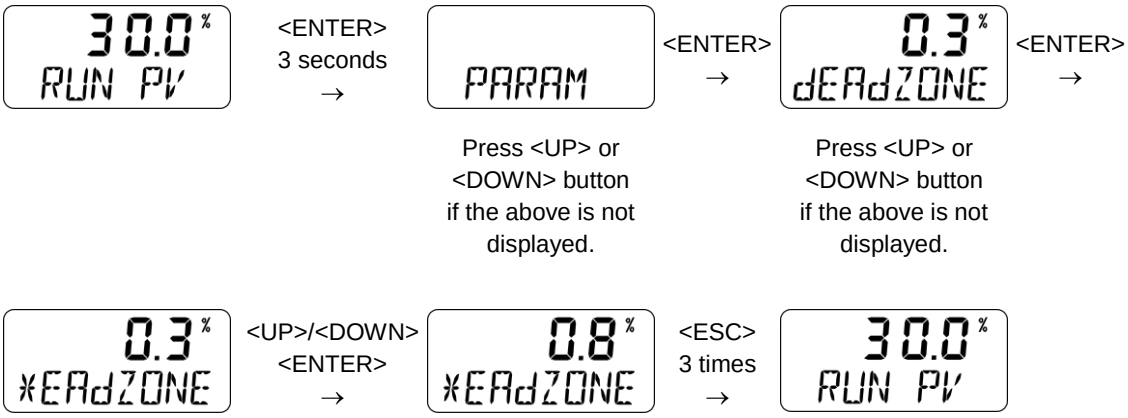

7.6.2 P Value (KP)

P value indicates the ratio of the compensation signal based on the percentage of error allowance. As the value increase, the positioner finds the target point quickly, but it is more likely to have hunting. As the value decrease, the stability of the positioner is higher, but it finds the target point slowly.

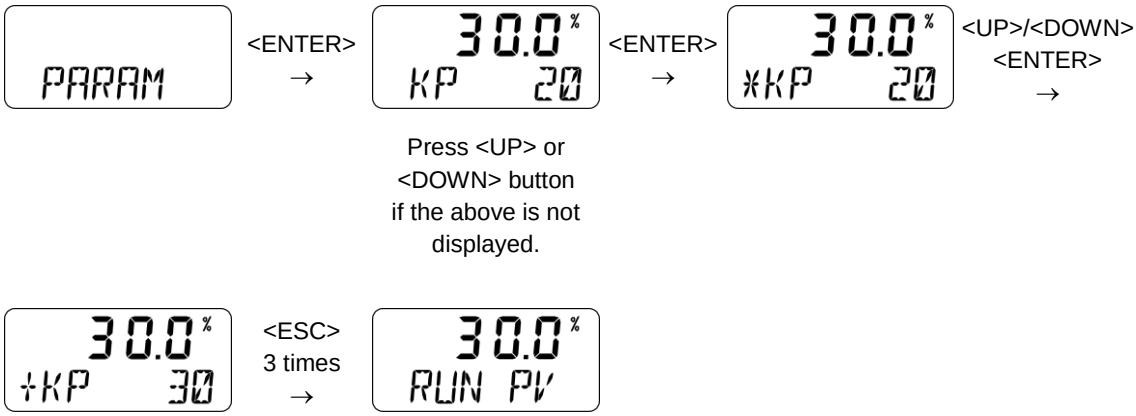

7.6.3 I Value (KI)

I value indicates the additional compensation signal based on the percentage of error allowance. As the value increase, it is more likely to have hunting. As the value decreases, the positioner will move slowly to the target position.

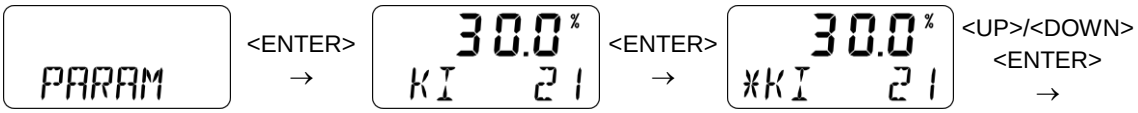

Press <UP> or <DOWN> button if the above is not displayed.

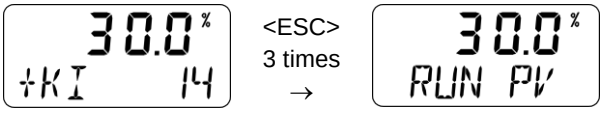

7.6.4 D Value (Kd)

D value indicates the derivative value of the compensation signal based on the percentage of error allowance. As the value increase, it is more likely to have hunting. As the value decreases, it can have poor linearity or dynamic characteristic.

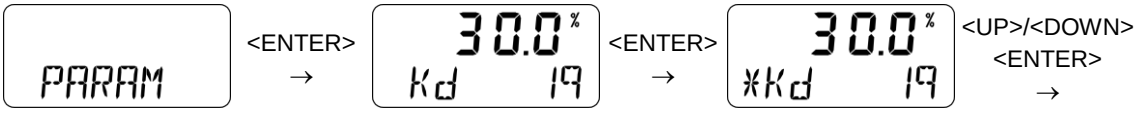

Press <UP> or <DOWN> button if the above is not displayed.

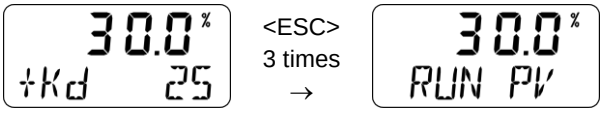

7.6.5 P_ (KP_), I_(KI_), D_ (Kd_) Values

P_, I_, and D_ values' principles are same as P, I, and D values, but these values will be activated when the error percentage is within 1%.

7.6.6 KF Up Value (KFUP)

KF Up Value is a control parameter value for high level of valve friction when the valve move up from 0% to 100%.

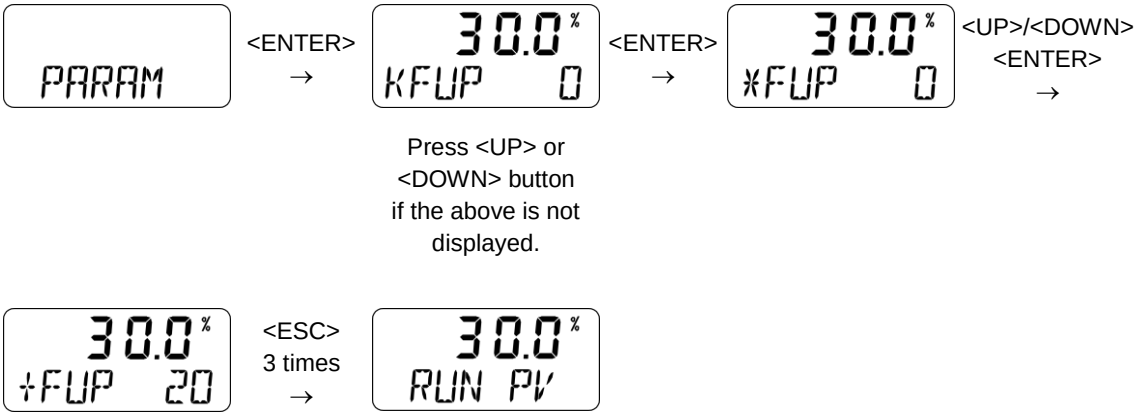

7.6.7 KF Down Value (KFdN)

KF Down Value is a control parameter value for high level of valve friction when the valve move down from 100% to 0%.

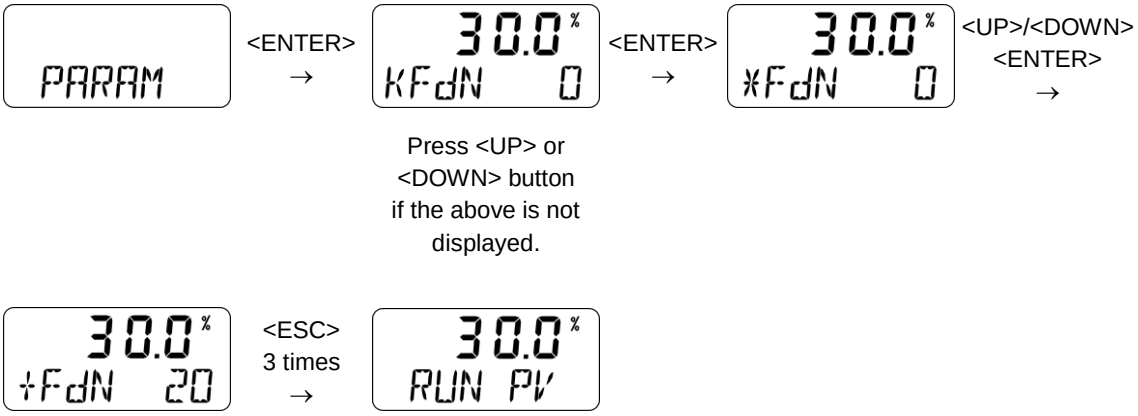

7.7 Hand Calibration Mode (HAND CAL)

Manual Calibration mode is used when zero-point and end-point require re-adjustment to use partial range of total strokes after Auto Calibration has been performed.

Below are the list of features which could be set from Hand CAL mode.

1) Zero-Point (PV ZERO) and End-Point (PV END) for Valves
2) Zero-Point (TR ZERO) and End-Point (TR END) for Transmitter
3) Normal / Reverse Feedback Signal (TR NORM / REVS)
4) Normal / Reverse HART Signal (HT NORM / REVS)

7.7.1 Zero-Point (PV ZERO) and End-Point (PV END) for Valves

PZ ZERO adjusts the zero point of the valve, and PV END adjusts the end point of the valve.

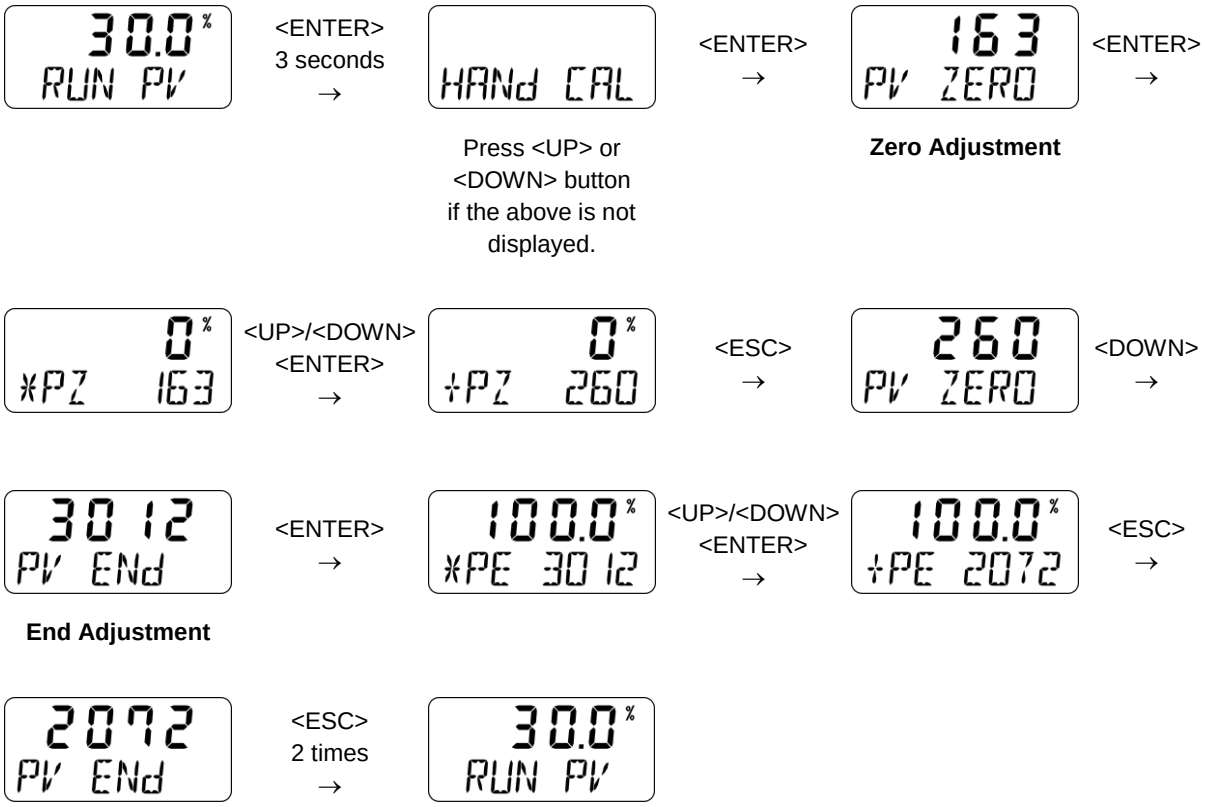

7.7.2 Zero-Point (TR ZERO) and End-Point (TR END) for Transmitter

TR ZERO adjusts the zero point of the transmitter (4mA feedback), and TR END adjusts the end point of the transmitter (20mA feedback). This is used when output signal becomes unstable and requires re-adjustment or when feedback output signal and actual stroke need to be used differently.

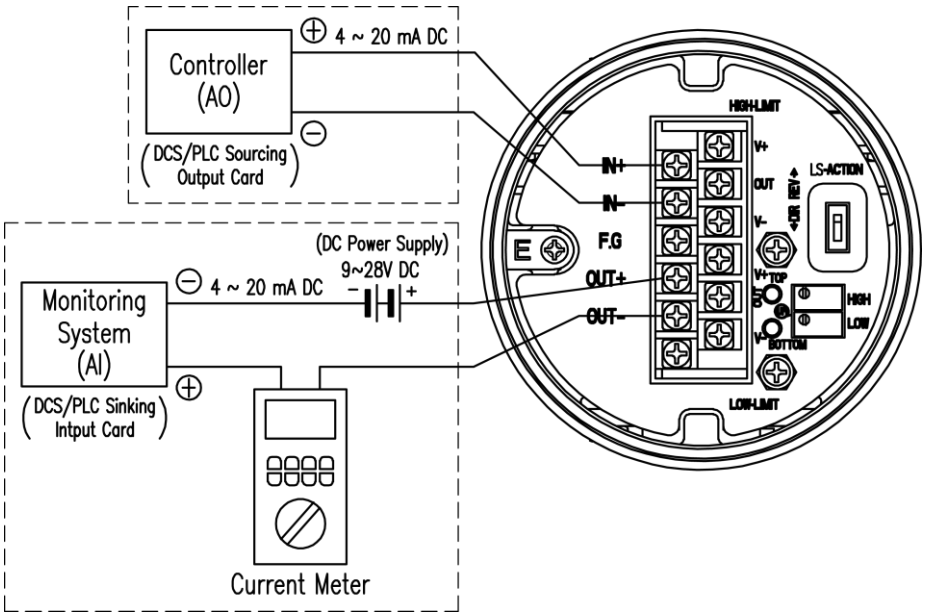

Fig. 7-2: Setting transmitter

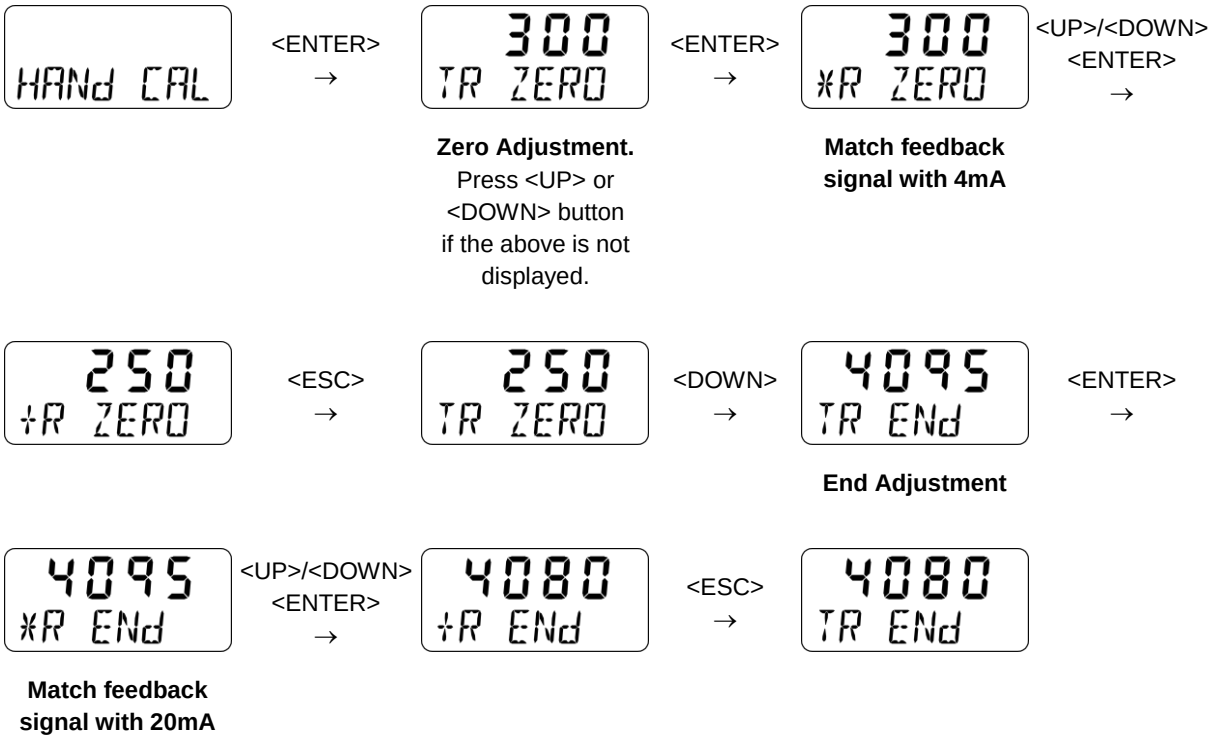

7.7.3 Normal / Reverse Feedback Signal (TR NORM / REVS)

The feedback signal from the positioner can be changed to normal or reverse.

HANd CAL <ENTER> → TR NORM <ENTER> → *R NORM <DOWN> →

Press <UP> or <DOWN> button if the above is not displayed.

*R REVS <ENTER> → +R REVS <ESC> 3 times → 30.0 % RUN PV

7.7.4 Normal / Reverse HART Signal (HT NORM / REVS)

Feedback signal of HART communication from the positioner can be changed to normal or reverse.

HANd CAL <ENTER> → HT NORM <ENTER> → *T NORM <DOWN> →

Press <UP> or <DOWN> button if the above is not displayed.

*T REVS <ENTER> → +T REVS <ESC> 3 times → 30.0 % RUN PV

7.8 Valve Mode (VALVE)

Valve mode offers useful and various function settings for operating the control valve.

Below are the list of functions which could be set from Valve mode.

1) Acting Adjustment (ACT RA / dA)
2) Characteristic Adjustment (CHAR)
3) User Characteristics (USER SET)
4) Tight Shut Open (TSHUT OP)
5) Tight Shut Close (TSHUT CL)
6) Split Range Mode (SPLIT)
7) Custom Zero Setting Mode (CST ZERO)
8) Custom End Setting Mode (CST ENd)
9) Interpolation Mode (ITP OFF / ON)
10) Acting Type (SINGLE / dOUBLE)
11) Lever Type (STd / AdT)

7.8.1 Acting Adjustment (ACT RA / dA)

RA & DA are automatically set by performing “AUTO 2” from Auto Calibration. However, this function is used when the user wants to change RA & DA.

The positioner can be set as Direct Action (DA) or Reverse Action (RA).

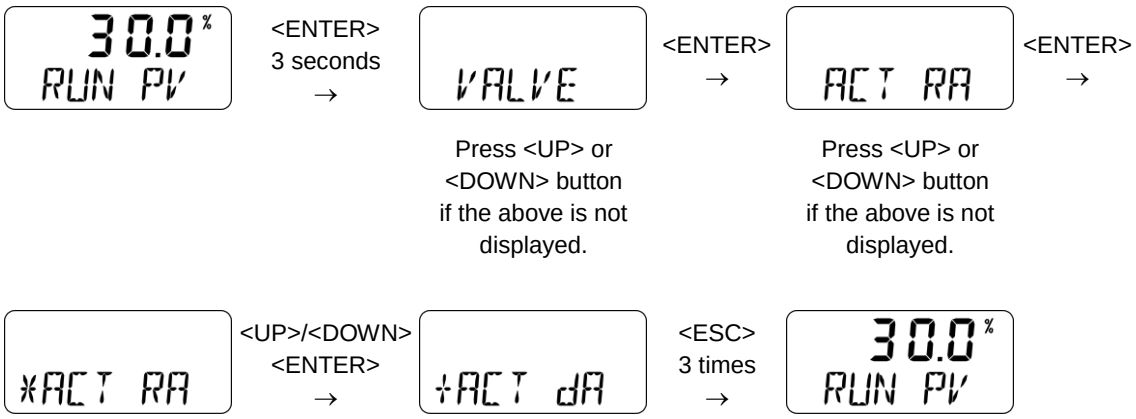

7.8.2 Valve flow Characteristic Adjustment (CHAR)

The valve flow characteristic can be set on the field's requirement. There are 4 types of characteristics – linear (LIN), user setting (USR), quick open (QO), and equal percentage (EQ).

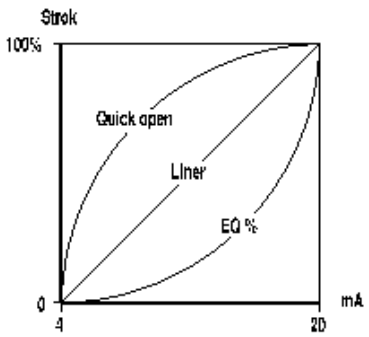

VALVE → <ENTER> → CHAR LIN → <ENTER> → *HAR LIN → <UP>/<DOWN> <ENTER> →

Press <UP> or <DOWN> button if the above is not displayed.

+HAR EQ → <ESC> 3 times → 30.0% RUN PV

7.8.3 User defining flow Characteristics (USER SET)

In case positioner requires a specific characteristic, the valve characteristic curve can be made by selecting up to 18 points of the curve. This function can be activated by selecting “CHAR USR” mode of above 7.8.2 Valve flow Characteristic Adjustment (CHAR).

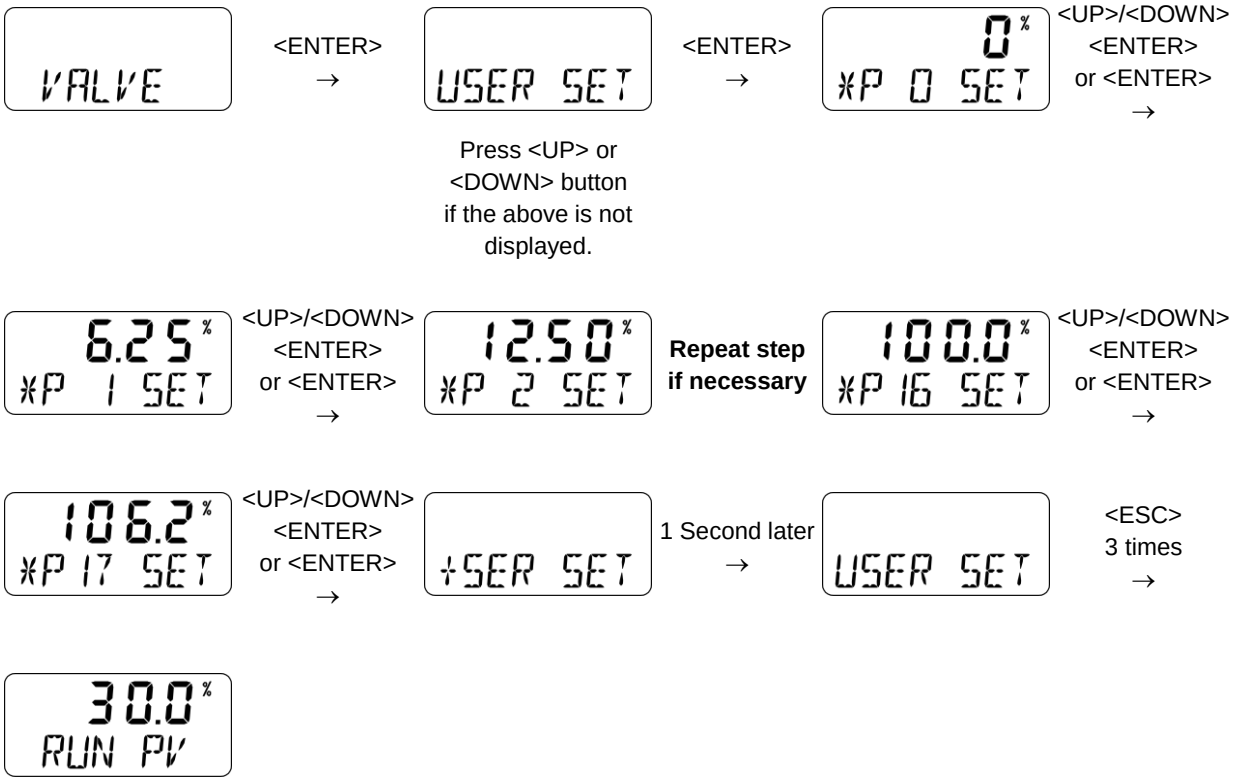

7.8.4 Tight Shut Open (TSHUT OP)

Tight shut open shows the current value in percentage (%). Input current of 4mA is 0%, 20mA is 100%. If temporary Tight shut open value (≤100%) is set and input current value is above the set % value, the valve's position is immediately moved to 100%. For example, if linear actuator is used and the valve's closing direction is 100% and input value of the current is above Tight shut open set value, the set pressure from the regulator will be transferred to the actuator which will enhance the power to close the valve and keep it from any leakage.

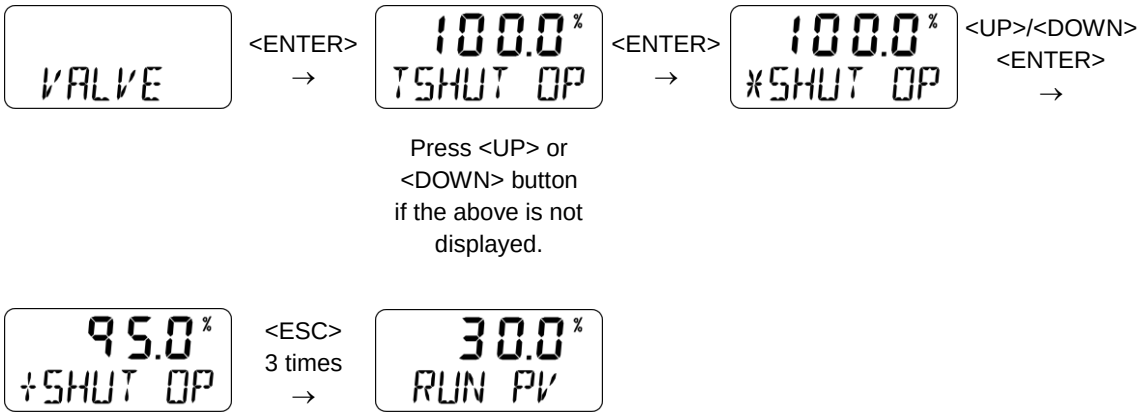

7.8.5 Tight Shut Close (TSHUT CL)

Tight shut close shows the current value in percentage (%). Input current of 4mA is 0%, 20mA is 100%. If temporary Tight shut close value (≤100%) is set and input current value is below the set % value, the valve's position is immediately moved to 0%. For example, if rotary actuator is used and the valve's closing direction is 0% and input value of the current is above Tight shut open set value, it will release all the remaining pressure from Out1 of the actuator which will have the return spring power of the actuator or Out2 pressure to close the valve and keep it from any leakage.

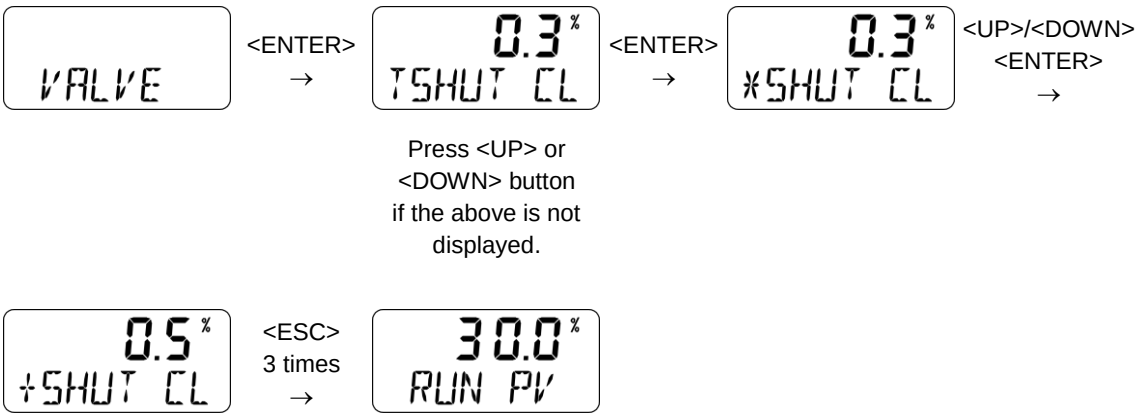

7.8.6 Split Range Mode (SPLIT)

The valve can be operated in full stroke by split range control of input signal as 4~12mA or 12~20mA.

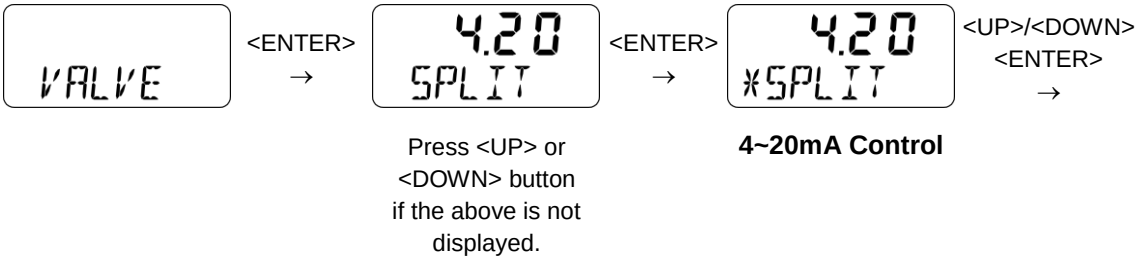

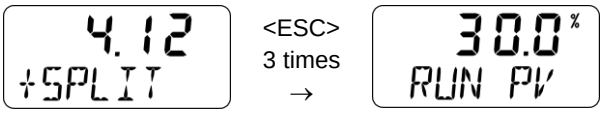

4~12mA Control

7.8.7 Custom Zero Setting Mode (CST ZERO)

From the initial 4~20mA control settings of valve stroke from 0~100%, this mode allows the user to change the zero point to (≥4) mA instead of 4mA.

For example, the user could change the control settings of the valve stroke from 4~20mA to 7~20mA for 0~100% stroke.

However, please note that the "Zero" and "End" points' deviation current value must be above 4mA.

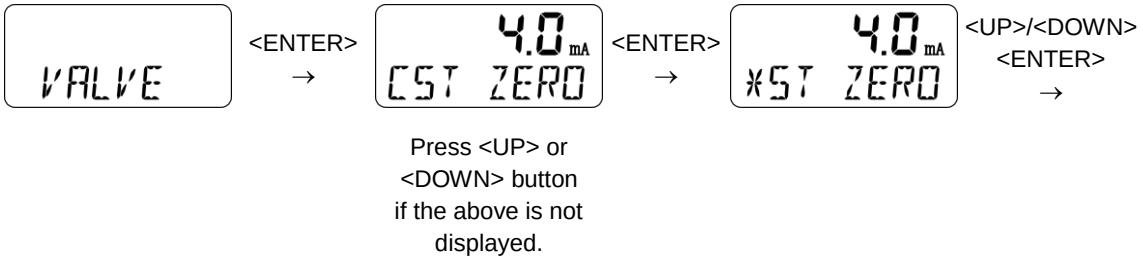

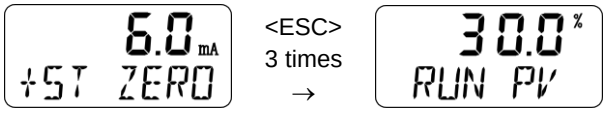

7.8.8 Custom End Setting Mode (CST ENd)

From the initial 4~20mA control settings of valve stroke from 0~100%, this mode allows the user to change the end point to (≤20) mA instead of 20mA.

For example, the user could change the control settings of the valve stroke from 4~20mA to 4~16mA for 0~100% stroke.

However, please note that the "Zero" and "End" points' deviation current value must be above 4mA.

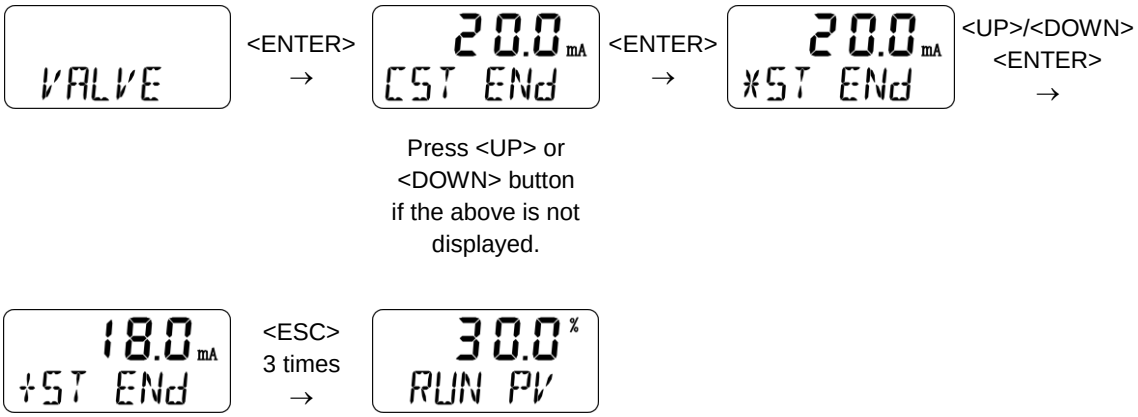

7.8.9 Interpolation Mode (ITP ON/OFF, ITP USER SET)

In case of linear positioner, the error of accuracy occurs when the linear motion of actuator changes into the rotary motion of feedback lever. After the auto calibration, the positioner turns on ITP function with an appropriate value of interpolation automatically. The user can manually turn on or off the ITP function, also can set any value of the interpolation. (in ITP USER mode)

※ The below shows that the user manually change ITP ON into OFF.

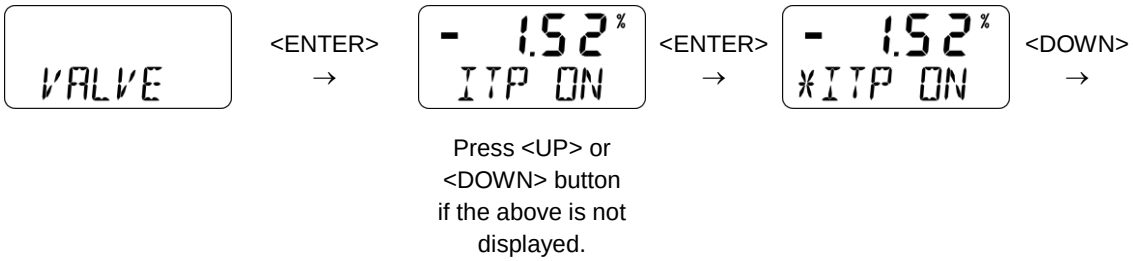

※ The below shows that the user manually set any value of the interpolation.

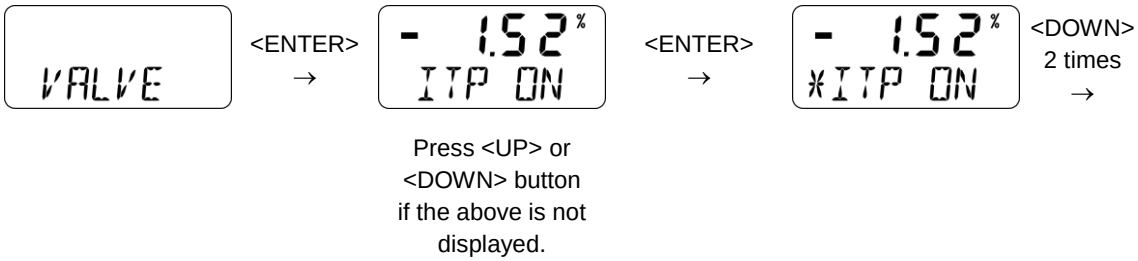

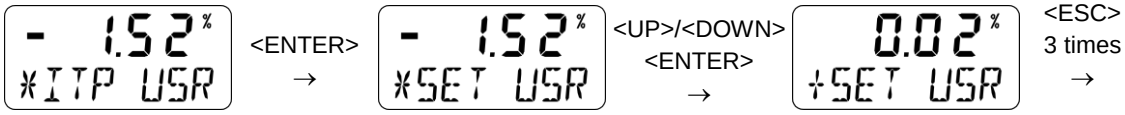

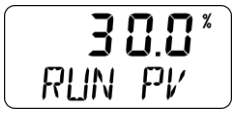

7.8.10 Acting Type (SINGLE / dOUBLE)

Displays or changes actuator's current acting type.

VALVE <ENTER> → SINGLE <ENTER> → *SINGLE <UP>/<DOWN> <ENTER> →

Press <UP> or <DOWN> button if the above is not displayed.

+dOUbLE <ESC> 3 times → 30.0% RUN PV

7.8.11 Lever Type (STd / AdT)

Displays or changes current lever type into standard type or adapter type. If the Lever type mode is set correctly, the accuracy will be worse at ITP ON than at ITP OFF.

VALVE <ENTER> → LEVT STd <ENTER> → *EVT STd <UP>/<DOWN> <ENTER> →

Press <UP> or <DOWN> button if the above is not displayed.

+EVT AdT <ESC> 3 times → 30.0% RUN PV

7.9 Diagnostic (dIAGNO)

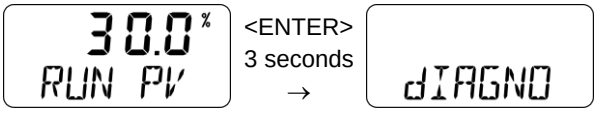

Press <UP> or <DOWN> button if the above is not displayed.

7.9.1 PST Introduction

Unlike FST (Full Stroke Test) where a valve such as an emergency shutoff valve is physically closed and opened in full,

PST is a method used to test a percentage of the possible failure of the valve by slightly closing and opening the valve when testing.

Rather than only performing FST regularly, PST is alternately applied with FST which could reduce the overall cost and risk.

The positioner includes PST function and it could operate while offline without any other software.

Also, PST function and results could be set and checked through HART communication.

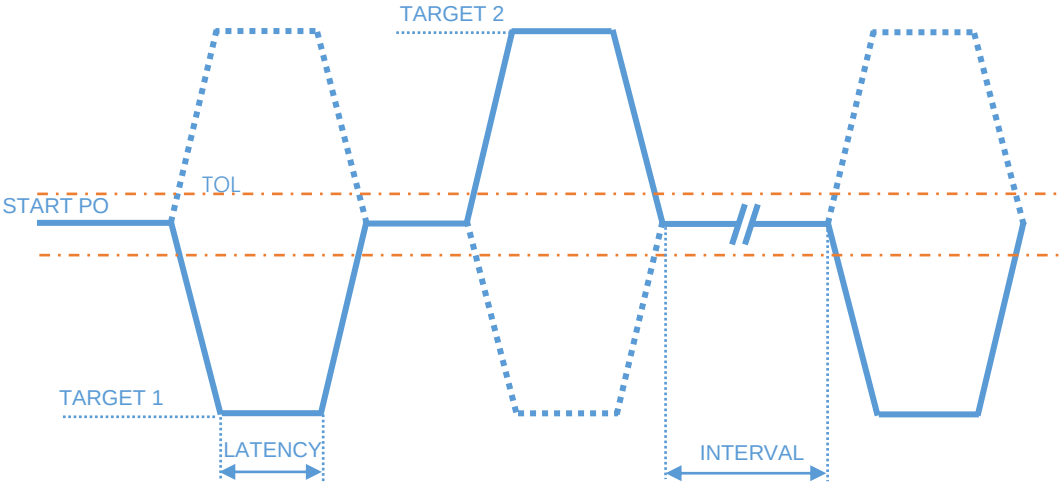

When **PST** runs by **PST NOW** or **SCHD,** if valve position is in the range of **TOL** from **START PO**, Positioner supply or vent air until the valve reach the **TARGET 1, 2.** But **PST** test will stop if valve position goes out of the **TOL** or doesn't reach **TARGET1, 2** within the **LIMIT TM**. After the valve position reach the **TARGET 1, 2,** the valve will pause during the **LATENCY** and move back to the **START PO**. The valve will be under ready state during the **INTERVAL** time after completing 1 cycle of **PST** in the **SCHD** mode.

7.9.2 PST Mode

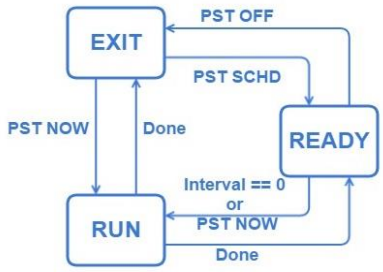

To run **PST**, select a **PST** mode. There are 3 mode for running PST.

Mode	Description
PST OFF	Stop PST Schedule. It's a default mode
PST SCHD	Run PST immediately. After PST complete, it turns back to the previous mode
PST NOW	PST runs repeatedly by interval value

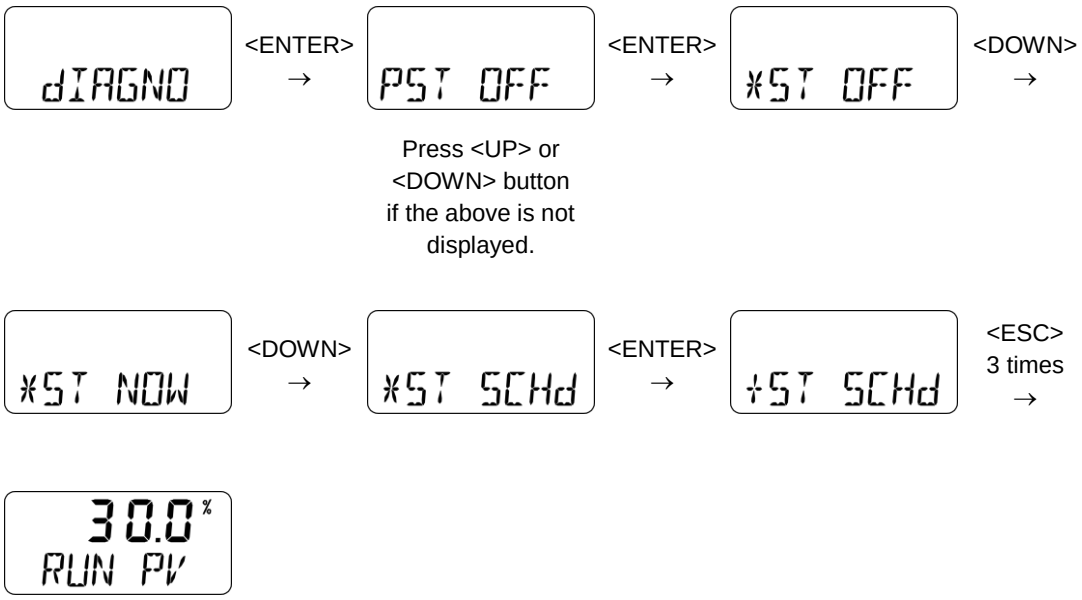

7.9.3 PST CFG

Check PST parameter values and configuration

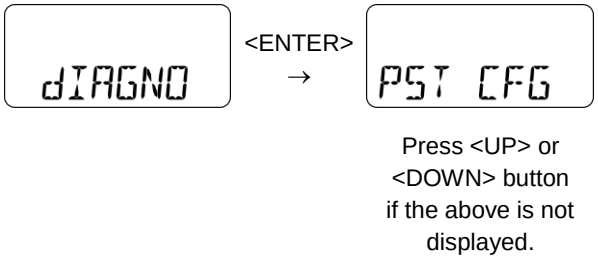

7.9.3.1 START PO

Sets start position when PST initiates. The position must be in between 0 and 100%, and default value is 100%.

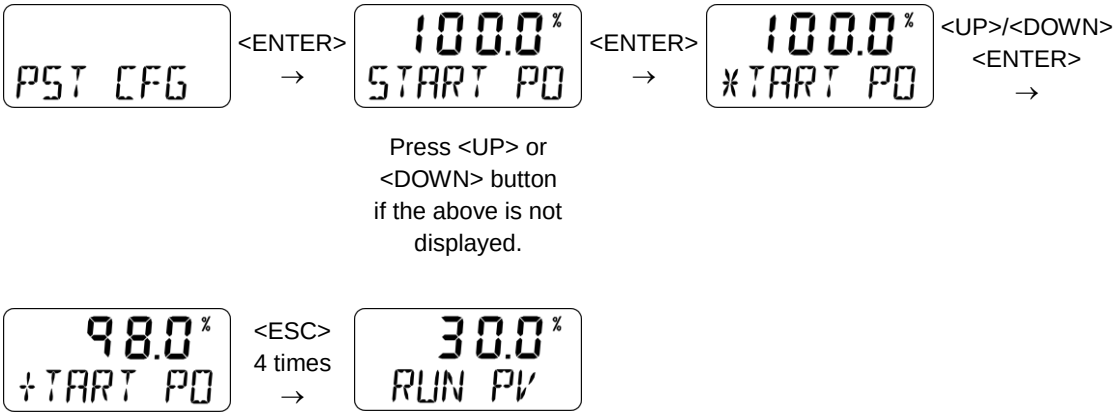

7.9.3.2 TARGET 1

Sets 1st target position of PST. The position must be in between 0 and 100%, and default value is 90%.

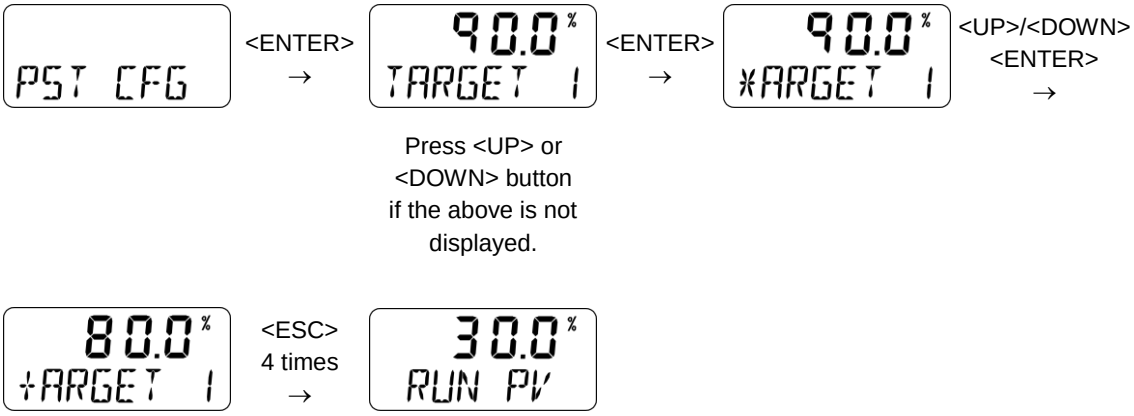

7.9.3.3 TARGET 2

Sets 2nd target position of PST. The position must be in between 0 and 100%, and default value is nA(Not Application).

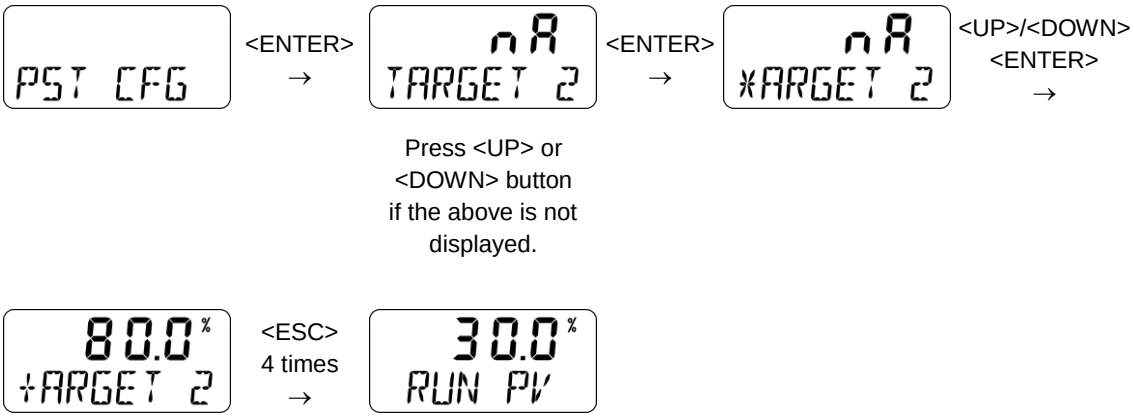

7.9.3.4 INTERVAL

Interval time (days) between 1st PST and the next PST. The value must be between 1 ~ 365, and default value is 365 (days).

PST CFG <ENTER> → 365 INTERVAL <ENTER> → 365 *NTERVAL <UP>/<DOWN> <ENTER> →

Press <UP> or <DOWN> button if the above is not displayed.

30 +NTERVAL <ESC> 4 times → 30.0% RUN PV

7.9.3.5 TOL

Tolerance level of the start position when PST runs. The value must be between 0.1 ~ 10%, and default value is 5%.

PST CFG <ENTER> → 5.0% TOL <ENTER> → 5.0% * TOL <UP>/<DOWN> <ENTER> →

Press <UP> or <DOWN> button if the above is not displayed.

4.0% + TOL <ESC> 4 times → 30.0% RUN PV

7.9.3.6 LIMIT TM

Limit the stroke time between start position and Target 1 and 2. The value must be between 0~600 sec, and default value is 600 (sec).

PST CFG <ENTER> → 600 LIMIT TM <ENTER> → 600 *IMIT TM <UP>/<DOWN> <ENTER> →

Press <UP> or <DOWN> button if the above is not displayed.

500 +IMIT TM <ESC> 4 times → 30.0% RUN PV

7.9.3.7 LATENCY

Latency for next movement after valve move. The value must be between 1~60 sec, and default value is 10 (sec).

PST CFG <ENTER> → 10 LATENCY <ENTER> → 10 *ATENCY <UP>/<DOWN> <ENTER> →

Press <UP> or <DOWN> button if the above is not displayed.

20 +ATENCY <ESC> 4 times → 30.0% RUN PV

7.9.4 PST RSLT

It will record or memorize maximum three **PST** results. The longest stroke time from **START PO** to the **TARGET 1, 2** or Error messages will be recorded

NAME	VALUE	DEFAULT
PST REC1	OOT,LTO,NR, 0 ~ 600(sec)	0
PST REC2	OOT,LTO,NR, 0 ~ 600(sec)	0
PST REC3	OOT,LTO,NR, 0 ~ 600(sec)	0

Error	Message
OOT	When the valve position is out of tolerance(**TOL**) from Start Position(**START PO**)
LTO	When the valve doesn't reach to the target position within the Limit Time(**LIMIT TM**)
NR	When the valve doesn't move

DIAGNO <ENTER> → 2.0 PST RSLT <ENTER> → 2.0 PST REC1 <DOWN> →

Press <UP> or <DOWN> button if the above is not displayed.

2.0 PST REC2 <DOWN> → 2.0 PST REC3 <ESC> 3 times → 30.0% RUN PV

7.10 View Mode (VIEW)

Displays various information of the positioner.

30.0 % RUN PV → <ENTER> 3 seconds → VIEW → <ENTER> → YT3400L → <DOWN> →

Press <UP> or <DOWN> button if the above is not displayed.

3.1.00 VERSION → <DOWN> → 7 HART REV → <DOWN> → 0 POL AddR → <DOWN> →

0 bIAS 25 → <DOWN> → 0 bIAS 75 → <DOWN> → 4.18 0Y 2d → <DOWN> →

3.12 FULL OP → <DOWN> → 2.97 FULL CL → <DOWN> → VM NORM → <DOWN> →

Erro → <DOWN> → 0 VALUE I → <DOWN> → 48.6 % AbS → <DOWN> →

25 TEMP → <DOWN> → W UNLOCK → <ESC> 3 times → 30.0 % RUN PV

ITEM	Description
YT-3400L	Positioner model.
3.1.00 VERSION / 2016MR 8	1'st row→version number of firmware. 2'nd row→VERSION: Main software version / 2016MR 8: loading date of software. ※ You can toggle them, pushing <ENTER>
HART REV	HART protocol version
POL AddR	HART protocol channel address. ※ You can change it, pushing <ENTER>
bIAS 25	BIAS value when valve position is at 25%
bIAS 75	BIAS value when valve position is at 75%
4.18 0Y 0d	Total used time duration. If a unit was used less than 1 minute, the time will not accumulate. 1'st row→"4.18" means 4hours and 18minutes. 2'nd row→0Y: years, 0d: days
3.12 FULL OP	Time required (seconds) to fully open the current valve from the closed state. Saved after AUTO 2 or AUTO HF Calibration.
2.97 FULL CL	Time required (seconds) to fully close the current valve from the opened state. Saved after AUTO 2 or AUTO HF Calibration.
VM NORM / VM REVS/ VM dIZ	Display types of valve stroke on LCD. VM NORM : View Mode Normal. 4mA → 0%, 20mA → 100% display. VM REVS : View Mode Reverse. 4mA → 100%, 20mA → 0% display. VM dIZ : Raw data. ※ You can change it, pushing <ENTER>
Erro	Error code(C, D) or warning code(B, F, G, H). Refer to 9.1 or 9.2 sections
VALUE I	Current accumulated value of I
ABS	Absolute resistance value.
Temp	Current Temperature. (℃)
W LOCK / W UNLOCK	When W UNLOCK, you can parameters including auto calibration function. When W LOCK, cannot. You can change it, pushing <ENTER>

8. Error and Warning Code

Below error and warning codes can be checked from “View” mode if there are any problems while using the product.

8.1 Error code

Error codes are indicated if the positioner cannot be controlled, malfunctions or becomes imprecise.

Error Code	Code Description and Cause	Action
MT ERR L	➢ Indicates that due to wrong positioning and installation of the positioner, there is a chance that the feedback lever and the positioner’s stopper could collide when the lever is at 0% during auto calibration. ➢ when this error is detected, auto calibration is aborted and this message is indicated immediately on LCD display.	➢ Set the feedback lever horizontally when at 50%. ➢ Re-adjust the position of the positioner by referring to the following effective range of the feedback lever’s angle. Linear : 30 degree Rotary : 90 degree.
MT ERR H	➢ Indicates that due to wrong positioning and installation of the positioner, there is a chance that the feedback lever and the positioner’s stopper could collide when the lever is at 100% during auto calibration. ➢ when this error is detected, auto calibration is aborted and this message is indicated immediately on LCD display.	
CHK AIR	➢ Indicated when the valve is not moving despite the positioner has given “Full Open” signal during auto calibration. ➢ when this error is detected, auto calibration is aborted and this message is indicated immediately on LCD display..	➢ Check if pressure is being supplied normally to the positioner.
RNG ERR	➢ Indicated when the feedback lever’s angle used is excessively small during auto calibration. ➢ when this error is detected, auto calibration is aborted and this message is indicated immediately on LCD display.	➢ Re-install the positioner by moving it towards the actuator stem so that the angle use of the feedback lever becomes larger.

C	➢ Indicated if the deviation between SV and PV is above 10% and is continued for over one minute. ➢ Indicated when the valve does not operate, friction is extremely high or when the air regulator's set pressure is too low. ➢ Can be checked from "Error" category in View mode. (Refer to section 7.10)	➢ Re-perform auto-calibration. ➢ Check air regulator's set pressure and re-adjust to appropriate pressure.
D	➢ Accumulated I value is I max or min's limit. ➢ Degree of precision is low. ➢ Indicated if valve's friction is extremely high or set pressure of air regulator has been changed. ➢ Can be checked from "Error" category in View mode. (Refer to section 7.10)	➢ Re-perform auto-calibration ➢ Check air regulator's set pressure and re-adjust to appropriate pressure.

8.2 Warning code

Below codes are indicated when the positioner can be controlled, but there is a possibility of malfunctioning or degree of precision has dropped.

Warning Code	Code Description and Cause	Action
B	➢ PV Span – PV Zero range is below 500. ➢ Feedback lever's angle use is too low. ➢ Can be checked from "Error" category in View mode. (Refer to section 7.10)	➢ Re-position the positioner so that the angle use of the feedback lever is larger than current angle. Then, perform AUTO1 calibration.
F	➢ Full open & Full close time is less than 1 second. ➢ Size of the actuator is too small. ➢ Can be checked from "Error" category in View mode. (Refer to section 7.10)	➢ Use orifice and lower the flow rate. ➢ Or replace the actuator with bigger size.
G	➢ PV is set below 100. ➢ Feedback lever's angle use is set too high. ➢ Can be checked from "Error" category in View mode. (Refer to section 7.10)	➢ Re-position the positioner so that the angle use of the feedback lever is smaller than current angle. Then, perform AUTO1 calibration.
H	➢ PV is set above 4000. ➢ Feedback lever's angle use is set too high. ➢ Can be checked from "Error" category in View mode. (Refer to section 7.10)	

9. Main Software Map